This Owner's Manual is provided and hosted by Appliance Factory Parts.

Appliance Factory Parts
Experts in BBQ, Humidifier, & Appliance Parts
1-800-955-7075

EMPIRE DVX36FP91LN-3 Owner's Manual

Shop genuine replacement parts for EMPIRE DVX36FP91LN-3

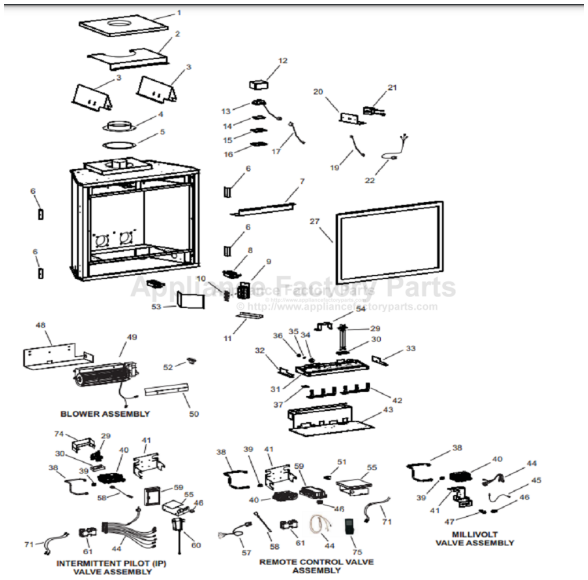

Find Your EMPIRE Fireplace Parts - Select From 642 Models

-------- Manual continues below --------

EMPIRE
COMFORT SYSTEMS
SINCE 1932

INSTALLATION INSTRUCTIONS AND OWNER'S MANUAL

INSTALLER:
Leave this manual with the appliance.

CONSUMER:
Retain this manual for future reference.

LUXURY DIRECT VENT GAS ZERO CLEARANCE FIREPLACE HEATER

MILLIVOLT STANDING PILOT	REMOTE CONTROL
DVX36FP31L(N,P)-4 DVX42FP31L(N,P)-4	DVX36FP91L(N,P)-3 DVX42FP91L(N,P)-3
INTERMITTENT PILOT	GAS-FIRED
DVX36FP71L(N,P)-3 DVX42FP71L(N,P)-3	C UL US LISTED UL FILE NO. MH30033

⚠ WARNING

FIRE OR EXPLOSION HAZARD
Failure to follow safety warnings exactly could result in serious injury, death or property damage.

- **Do not store or use gasoline or other flammable vapors and liquids in the vicinity of this or any other appliance.**
- **WHAT TO DO IF YOU SMELL GAS**
  - **Do not try to light any appliance.**
  - **Do not touch any electrical switch; do not use any phone in your building.**
  - **Leave the building immediately.**
  - **Immediately call your gas supplier from a neighbor's phone. Follow the gas supplier's instructions.**
  - **If you cannot reach your gas supplier, call the fire department.**
- **Installation and service must be performed by a qualified installer, service agency or the gas supplier.**

⚠ WARNING

If not installed, operated and maintained in accordance with the manufacturer's instructions, this product could expose you to substances in fuel or from fuel combustion which can cause death or serious illness.

This appliance may be installed in an aftermarket, permanently located, manufactured home (USA only) or mobile home, where not prohibited by state or local codes.
This appliance is only for use with the type of gas indicated on the rating plate. This appliance is not convertible for use with other gases, unless a certified kit is used.

⚠ WARNING

HOT GLASS WILL CAUSE BURNS.
DO NOT TOUCH GLASS UNTIL COOLED.
NEVER ALLOW CHILDREN TO TOUCH GLASS.

A barrier designed to reduce the risk of burns from the hot viewing glass is provided with this appliance and shall be installed for the protection of children and other at-risk individuals.

NOTE: Barrier required, but may be sold separately.

NATIONAL FIREPLACE INSTITUTE
NFI
CERTIFIED
www.nficertified.org

We suggest that our gas hearth products be installed and serviced by professionals who are certified in the U.S. by the National Fireplace Institute® (NFI) as NFI Gas Specialists.

TABLE OF CONTENTS

SECTION	PAGE
Important Safety Information	3
Safety Information For Users Of Propane Gas	4
Requirements For Massachusetts	5
Introduction	6
Specifications	7
Special Vent Systems	8
Vent System Identification	9
Fireplace Dimensions	10
Clearances	11
Locating Fireplace	12
Gas Supply	13
Installation	14-17
Venting Fireplace - Top	18-20
Examples - Top Vent Run	21
Vent Clearances	22
Venting Framing And Finishing	23-24
Termination Clearances	25
Horizontal Termination	26
Vertical Termination	27-28
DVVK-4FV Direct Vent Termination Kit	29-35
DVVK-4F Flex Vent Instructions	36
DVVK-4RE Vent Kit Installation Instructions	37-39
DVVK-5F Flex Vent Instructions	40
Propane Gas Conversion Settings	41
Log Identification	42-43
Log Placement (13 Log Set)	44-59
Millivolt System Operating Instructions	60-61
Millivolt Standing Pilot Wiring Diagram	62
Millivolt Standing Pilot Lighting Instructions	63
Millivolt Standing Pilot Troubleshooting	64
IPI Electronic System Operating Instructions	65
IPI Electronic System Wiring Diagram	66
Intermittent Pilot Lighting Instructions	67
Intermittent Pilot Control System Troubleshooting	68-70
Remote Control Operation Instructions	71-76
Remote Control System - Wiring Diagram	77
Remote Control System - Lighting Instructions	78
Remote Control System - Troubleshooting	79-80
Maintenance And Service	81-83
Parts List - DVX36FP(3,7,9)	84-85
Parts List - DVX42FP(3,7,9)	86-87
Parts View	88
Master Parts Distributor List	89
How To Order Repair Parts	89
FBB4 Optional Variable Speed Blower Installation	90-91
Junction Box Wiring Installation Instructions	91
Accent Lamp	92
Accessories	93
Quick Reference Guide	94-95
Warranty	96

IMPORTANT SAFETY INFORMATION

Before enclosing the vent pipe assembly, operate the appliance to ensure it is venting properly.

DO NOT OPERATE THIS APPLIANCE WITHOUT GLASS FRONT PANEL INSTALLED

WARNING

1. "Due to high temperatures, the appliance should be located out of traffic and away from furniture and draperies."
2. "Children and adults should be alerted to the hazards of high surface temperature and should stay away to avoid burns or clothing ignition."
3. "Young children should be carefully supervised when they are in the same room as the appliance. Toddlers, young children, and others may be susceptible to accidental contact burns. A physical barrier is recommended if there are at-risk individuals in the house. To restrict access to a fireplace or stove, install an adjustable safety gate to keep toddlers, young children, and other at-risk individuals out of the room and away from hot surfaces."
4. For appliances requiring a barrier, as determined under Clause 5.15.4: "A barrier designed to reduce the risk of burns from the hot viewing glass is provided with this appliance and shall be installed for the protection of children and other at-risk individuals."
5. "If the barrier becomes damaged, the barrier shall be replaced with the manufacturer's barrier for this appliance."
6. "Clothing or other flammable material should not be placed on or near the appliance."
7. "Any safety screen, guard, or barrier removed for servicing an appliance must be replaced prior to operating the appliance" (see Clause 4.1.6).
8. "Installation and repair should be done by a qualified service person. The appliance should be inspected before use and at least annually by a professional service person. More frequent cleaning might be required due to excessive lint from carpeting, bedding material, et cetera. It is imperative that control compartments, burners, and circulating air passageways of the appliance be kept clean."
9. The instructions for an appliance optionally for use with glass doors (or equivalent) shall state that, "Only doors certified with the appliance shall be used."
10. The instructions for an appliance not intended for use with glass doors (or equivalent) shall emphasize that the appliance is not for use with glass doors.
11. Where applicable, provide a means by which the consumer can identify the barrier, (such as graphic representation, clear description, or reference marking).

WARNING

CARBON MONOXIDE POISONING HAZARD

Failure to follow the steps outlined below for each appliance connected to the venting system being placed into operation could result in carbon monoxide poisoning or death. The following steps shall be followed for each appliance connected to the venting system being placed into operation, while all other appliances connected to the venting system are not in operation:

1. Seal any unused openings in the venting system.
2. Inspect the venting system for proper size and horizontal pitch, as required in the *National Fuel Gas Code ANSI Z223.1/NFPA 54* or *the National Gas and Propane Installation Code* CSA B149.1 and these instructions. Determine that there is no blockage or restriction, leakage, corrosion and other deficiencies which could cause an unsafe condition.
3. As far as practical, close all building doors and windows and all doors between the space in which the appliance(s) connected to the venting system are located and other spaces of the building.
4. Close fireplace dampers.
5. Turn on clothes dryers and any appliance not connected to the venting system. Turn on any exhaust fans, such as range hoods and bathroom exhausts, so they are operating at maximum speed. Do not operate a summer exhaust fan.
6. Follow the lighting instructions. Place the appliance being inspected into operation. Adjust the thermostat so appliance is operating continuously.
7. Test for spillage from draft hood equipped appliances at the draft hood relief opening after 5 minutes of main burner operation. Use the flame of a match or candle.
8. If improper venting is observed during any of the above tests, the venting system must be corrected in accordance with *National Fuel Gas Code*, ANSI Z223.1/NFPA and/or *National Gas and Propane Installation Code*, CSA B149.1.
9. After it has been determined that each appliance connected to the venting system properly vents when tested as outlined above, return doors, windows, exhaust fans, fireplace dampers and any other gas-fired burning appliance to their previous conditions of use.

SAFETY INFORMATION FOR USERS OF PROPANE GAS

Propane is a flammable gas which can cause fires and explosions. In its natural state, propane is odorless and colorless. You may not know all the following safety precautions which can protect both you and your family from an accident. Read them carefully now, then review them point by point with the members of your household. Someday when there may not be a minute to lose, everyone's safety will depend on knowing exactly what to do. If, after reading the following information, you feel you still need more information, please contact your gas supplier.

PROPANE GAS WARNING ODOR

If a gas leak happens, you should be able to smell the gas because of the odorant put in the Propane Gas. That's your signal to go into immediate action!

- Do not operate electric switches, light matches, use your phone. Do not do anything that could ignite the gas.
- Get everyone out of the building, vehicle, trailer, or area. Do that IMMEDIATELY.
- Close all gas tank or cylinder supply valves.
- Propane Gas is heavier than air and may settle in low areas such as basements. When you have reason to suspect a gas leak, keep out of basements and other low areas. Stay out until firefighters declare them to be safe.
- Use your neighbor's phone and call a trained Propane Gas service person and the fire department. Even though you may not continue to smell gas, do not turn on the gas again. Do not re-enter the building, vehicle, trailer, or area.
- **Finally**, let the service man and firefighters check for escaped gas. Have them air out the area before you return. Properly trained Propane Gas service people should repair the leak, then check and relight the gas appliance for you.

NO ODOR DETECTED - ODOR FADE

Some people cannot smell well. Some people cannot smell the odor of the chemical put into the gas. You must find out if you can smell the odorant in propane. Smoking can decrease your ability to smell. Being around an odor for a time can affect your sensitivity or ability to detect that odor. Sometimes other odors in the area mask the gas odor. People may not smell the gas odor or their minds are on something else. Thinking about smelling a gas odor can make it easier to smell.

The odorant in Propane Gas is colorless, and it can fade under some circumstances. For example, if there is an underground leak, the movement of the gas through soil can filter the odorant. Odorants in Propane Gas also are subject to oxidation. This fading can occur if there is rust inside the storage tank or in iron gas pipes.

The odorant in escaped gas can adsorb or absorb onto or into walls, masonry and other materials and fabrics in a room. That will take some of the odorant out of the gas, reducing its odor intensity.

Propane Gas may stratify in a closed area, and the odor intensity could vary at different levels. Since it is heavier than air, there may be more odor at lower levels. Always be sensitive to the slightest gas odor. If you detect any odor, treat it as a serious leak. Immediately go into action as instructed earlier.

SOME POINTS TO REMEMBER

- Learn to recognize the odor of Propane Gas. Your local Propane Gas Dealer can give you a "Scratch and Sniff" pamphlet. Use it to find out what the propane odor smells like. If you suspect that your Propane Gas has a weak or abnormal odor, call your Propane Gas Dealer.
- If you are not qualified, do not light pilot lights, perform service, or make adjustments to appliances on the Propane Gas system. If you are qualified, consciously think about the odor of Propane Gas prior to and while lighting pilot lights or performing service or making adjustments.
- Sometimes a basement or a closed-up house has a musty smell that can cover up the Propane Gas odor. Do not try to light pilot lights, perform service, or make adjustments in an area where the conditions are such that you may not detect the odor if there has been a leak of Propane Gas.
- Odor fade, due to oxidation by rust or adsorption on walls of new cylinders and tanks, is possible. Therefore, people should be particularly alert and careful when new tanks or cylinders are placed in service. Odor fade can occur in new tanks, or reinstalled old tanks, if they are filled and allowed to set too long before refilling. Cylinders and tanks which have been out of service for a time may develop internal rust which will cause odor fade. If such conditions are suspected to exist, a periodic sniff test of the gas is advisable. **If you have any question about the gas odor, call your Propane Gas Dealer. A periodic sniff test of the Propane Gas is a good safety measure under any condition.**
- If, at any time, you do not smell the Propane Gas odorant and you think you should, assume you have a leak. Then take the same immediate action recommended above for the occasion when you do detect the odorized Propane Gas.
- If you experience a complete "gas out," (the container is under no vapor pressure), turn the tank valve off immediately. If the container valve is left on, the container may draw in some air through openings such as pilot light orifices. If this occurs, some new internal rusting could occur. If the valve is left open, then treat the container as a new tank. Always be sure your container is under vapor pressure by turning it off at the container before it goes completely empty or having it refilled before it is completely empty.

REQUIREMENTS FOR MASSACHUSETTS

For all side wall horizontally vented gas fueled equipment installed in every dwelling, building or structure used in whole or in part for residential purposes, including those owned or operated by the Commonwealth and where the side wall exhaust vent termination is less than seven (7) feet above finished grade in the area of the venting, including but not limited to decks and porches, the following requirements shall be satisfied:

1. INSTALLATION OF CARBON MONOXIDE DETECTORS. At the time of installation of the side wall horizontal vented gas fueled equipment, the installing plumber or gasfitter shall observe that a hard wired carbon monoxide detector with an alarm and battery back-up is installed on the floor level where the gas equipment is to be installed. In addition, the installing plumber or gasfitter shall observe that a battery operated or hard wired carbon monoxide detector with an alarm is installed on each additional level of the dwelling, building or structure served by the side wall horizontal vented gas fueled equipment. It shall be the responsibility of the property owner to secure the services of qualified licensed professionals for the installation of hard wired carbon monoxide detectors
   a. In the event that the side wall horizontally vented gas fueled equipment is installed in a crawl space or an attic, the hard wired carbon monoxide detector with alarm and battery back-up may be installed on the next adjacent floor level.
   b. In the event that the requirements of this subdivision can not be met at the time of completion of installation, the owner shall have a period of thirty days to comply with the above requirements; provided, however, that during said thirty day period, a battery operated carbon monoxide detector with an alarm shall be installed.

2. APPROVED CARBON MONOXIDE DETECTORS. Each carbon monoxide detector as required in accordance with the above provisions shall comply with NFPA 720 and be ANSI/ UL 2034 listed and IAS certified.

3. SIGNAGE. A metal or plastic identification plate shall be permanently mounted to the exterior of the building at a minimum height of eight feet above grade directly in line with the exhaust vent terminal for the horizontally vented gas fueled heating appliance or equipment. The sign shall read, in print size no less than one-half inch in size, **"GAS VENT DIRECTLY BELOW. KEEP CLEAR OF ALL OBSTRUCTIONS".**

4. INSPECTION. The state or local gas inspector of the side wall horizontally vented gas fueled equipment shall not approve the installation unless, upon inspection, the inspector observes carbon monoxide detectors and signage installed in accordance with the provisions of 248 CMR 5.08(2)(a) 1 through 4.
   (b) EXEMPTIONS: The following equipment is exempt from 248 CMR 5.08(2)(a)1 through 4:
      1. The equipment listed in Chapter 10 entitled "Equipment Not Required To Be Vented" in the most current edition of NFPA 54 as adopted by the Board; and
      2. Product Approved side wall horizontally vented gas fueled equipment installed in a room or structure separate from the dwelling, building or structure used in whole or in part for residential purposes.
   (d) MANUFACTURER REQUIREMENTS - GAS EQUIPMENT VENTING SYSTEM NOT PROVIDED. When the manufacturer of a Product Approved side wall horizontally vented gas fueled equipment does not provide the parts for venting the flue gases, but identifies "special venting systems", the following requirements shall be satisfied by the manufacturer:
      1. The referenced "special venting system" instructions shall be included with the appliance or equipment installation instructions; and
      2. The "special venting systems" shall be Product Approved by the Board, and the instructions for that system shall include a parts list and detailed installation instruction.
   (e) A copy of all installation instructions for all Product Approved side wall horizontally vented gas fueled equipment, all venting instructions, all parts lists for venting instructions, and/or all venting design instructions shall remain with the appliance or equipment at the completion of the installation.

INTRODUCTION

Instructions to Installer

1. Installer must leave instruction manual with owner after installation.
2. Installer must have owner fill out and mail warranty card supplied with the fireplace.
3. Installer should show owner how to start and operate the fireplace.

This direct vent gas fireplace heater is designed to operate with all combustion air being siphoned from the outside of the building and all exhaust gases expelled to the outside of the building. The information contained in this manual pertains to all models and gas control systems unless otherwise noted.

⚠ WARNING

This unit is not for use with solid fuels.

Appliance Certification

This fireplace is design certified in accordance with American National Standard/CSA Standard ANSI Z21.88/CSA 2.33 and by Underwriters Laboratories as a Direct Vent Gas Fireplace Heater and shall be installed according to these instructions.

Consult your local building code agency, prior to installation, to ensure compliance with local codes-including permits and inspections.

The fireplace, when installed, must be electrically grounded in accordance with local codes or, in absence of local codes, with the *National Electric Code ANSI/NFPA 70 or Canadian Electric code, CSA C22.1*, if an external electrical source is utilized.

These models may be installed in a bedroom or bed-sitting room in the U.S.A. and Canada.

Qualified Installing Agency

Installation and replacement of gas piping, gas utilization equipment or accessories and repair and servicing of equipment shall be performed only by a qualified agency. The term “qualified agency” means any individual, firm, corporation or company which either in person or through a representative is engaged in and is responsible for (a) the installation or replacement of gas piping or (b) the connection, installation, repair or servicing of equipment, who is experienced in such work, familiar with all precautions required and has complied with all the requirements of the authority having jurisdiction.

Commonwealth of Massachusetts: The installation must be made by a licensed plumber or gas fitter in the Commonwealth of Massachusetts.

The installation must conform with local codes or, in the absence of local codes, with the N*ational Fuel Gas Code ANSI Z223.1/NFPA 54* Natural Gas and Propane Installation Code, or CSA B149.1 in Canada. *Available from the American National Standards Institute, Inc. 11 West 42nd St., New York, N.Y. 10036.*

⚠ WARNING

Any change to this fireplace or its controls can be dangerous. Improper installation or use of the fireplace can cause serious injury or death from fire, burns, explosions, or carbon monoxide poisoning.

Any alteration of the original design, installed other than as shown in these instructions or use with a type of gas not shown on the rating plate is the responsibility of the person and company making the change.

Important

All correspondence should refer to complete Model Number, Serial Number and type of gas.

High Altitude

When installing this unit at an elevation above 2000 feet (in the United States) it may be necessary to decrease the input rating by changing the existing burner orifice to a smaller size. Generally, input should be reduced 4 percent for each 1000 feet above sea level. However, if the heating value of the gas has been reduced, this general rule may not apply. Check with local gas utility for proper orifice size identification.

Canadian High Altitude

Altitude: 0-4500 feet (0-1370 m)

When installing this unit at an elevation above 4500 feet (in Canada), check with local authorities.

Consult your local gas utility for assistance in determining the proper orifice for location.

Preparation

This direct vent gas fireplace and its components are tested and safe when installed in accordance with this Installation Manual. Report to your dealer any parts damaged in shipment, specifically check glass condition. Do not install unit with damaged, incomplete, or substitute parts. Read all instructions before starting installation and follow these instructions carefully during installation to insure maximum benefit and safety. Failure to follow them will void your warranty and may present a fire hazard.

The warranty will be voided by, and the warranter disclaims any responsibility for the following actions:

- Installation of any damaged fireplace or vent system component.
- Modification of the fireplace or direct vent system.
- Installation other than as instructed by Empire Comfort Systems, Inc.
- Improper positioning of the logs, glass door or decorative rock.
- Installation and/or use of any component part not manufactured or approved by manufacturer.

SPECIFICATIONS

	DVX36 - NATURAL	DVX36 - PROPANE
Input Btu/hr Maximum	35,000	30,000
Btu/hr Minimum	24,500	21,000
KWH (Maximum)	10.3	8.8
(Minimum)	7.2	6.2
Orifice	#32 (P211)	1.65mm (P250)
Air Shutter Opening	1/4" (6.4mm)	FULL OPEN
Height without standoff	34 3/4 (883mm)	34 3/4" (883mm)
Width	39 3/8" (1,000mm)	39 3/8" (1,000mm)
Depth	19 7/8" (505mm)	19 7/8" (505mm)
Gas Inlet Shut-off Valve (Pipe)	1/2 NPT	1/2 NPT
Venting Size	4 x 6 5/8	4 x 6 5/8
	DVX42 - NATURAL	**DVX42 - PROPANE**
Input Btu/hr Maximum	37,500	35,000
Btu/hr Minimum	26,000	28,000
KWH (Maximum)	11	10.3
(Minimum)	7.6	7.2
Orifice	#31 (P209)	#50 (P245)
Air Shutter Opening	1/4" (6.4mm)	FULL OPEN
Height without standoff	34 3/4" (883mm)	34 3/4" (883mm)
Width	43 3/8" (1,101mm)	43 3/8" (1,101mm)
Depth	19 7/8" (505mm)	19 7/8" (505mm)
Gas Inlet Shut-off Valve (Pipe)	1/2 NPT	1/2 NPT
Venting Size	5 x 8	5 x 8

NOTE: Air shutter settings are factory minimum settings. Some venting configurations may require minor air shutter adjustments for optimum performance.

REMOTE CONTROL OPTIONS AND ACCESSORIES	DESCRIPTION
FRBC	Millivolt/IP Battery Remote ON/OFF
FRBTC	Millivolt/IP Battery Battery Remote T-Stat
FREC	Electric Remote
FRBTP	Millivolt/IP Programmable Remote
TMV	Millivolt/IP WIRELESS Wall Thermostat
TRW	Millivolt/IP REED SWITCH Wall Thermostat
FWS-1	Millivolt/IP Wall Switch

FIREPLACE BARRIER SCREENS		
SCREEN MODEL	**COLOR**	**USED ON**
DVFQ36TBL	Matte Black	DVX36FP
DVFQ42TBL	Matte Black	DVX42FP

NOTE: A firescreen is required for operation of the appliance, but are sold separately. Follow the instructions that come with your firescreen for proper installation.

CONVERSION KITS		
Model	**Description**	**Part Number**
DVX36FP31	Propane to Natural	23695
DVX36FP31	Natural to Propane	23702
DVX36FP71	Propane to Natural	32018
DVX36FP71	Natural to Propane	32022
DVX36FP91	Propane to Natural	35444
DVX36FP91	Natural to Propane	35445
DVX42FP31	Propane to Natural	23697
DVX42FP31	Natural to Propane	23700
DVX42FP71	Propane to Natural	32019
DVX42FP71	Natural to Propane	32023
DVX42FP91	Propane to Natural	35446
DVX42FP91	Natural to Propane	35447

SPECIAL VENT SYSTEMS

The following vent systems are acceptable for use with the DVX42 series fireplaces:

- Duravent® Pro 5" - 8"
- American Metal Products 5" - 8"
- Selkirk Direct-Temp® 5" - 8"
- Security Secure Vent® 5" - 8"
- Excel DV Venting 5" - 8"
- Empire Flexvent Kit DVVK-5F
- BDM - 5" - 8"
- MetalFab SureSeal® 5" - 8"
- Olympia VENTIS®

The following vent systems are acceptable for use with the DVX36 series fireplaces:

- Duravent® Pro 4" - 6 5/8"
- American Metal Products 4" - 6 5/8"
- Selkirk Direct-Temp® 4" - 6 5/8"
- Security Secure Vent® 4" - 6 5/8"
- Excel DV Venting 4" - 6 5/8"
- BDM 4" - 6 5/8"
- MetalFab SureSeal® 4" - 6 5/8"
- Olympia VENTIS®
- Empire Flex Vent Kits: DVVK-4F, DVVK-4FRE, DVVK-4FREVS
- Empire Horizontal Round Termination Kits:
  1. DVVK-4RE
  2. DVVK-4REVS

NOTE: SD58DVA-X46 not for use with Flex Vent Kits. For use with Duravent Pro Hard Pipe venting only.

VENT SYSTEM IDENTIFICATION

Begin the vent system installation by selecting the type of venting to be installed and the path that it will take. Verify that clearances are met throughout the path of the venting system. Determine if the fireplace is to be vented out the top or out the rear.

NOTICE: Some fireplaces cannot be vented out the rear of the fireplace.

Determine how the vent system will be terminated out the side of the house or through the roof. Verify clearances for the termination.

When selecting a vent system for use with the fireplace, refer to the "Special Vent Systems" section in this manual to determine what systems are acceptable. Check all clearances and venting components. Identify if any problems existing in the vent system. Use **Figure 20** on page 18 for top venting to eliminate issues after installation. Check pipe diameter on vent system and fireplace to verify the size is the same.

***NOTICE*: All outer connection joints must be sealed with aluminum tape, screws or silicone sealant rated above 300°F/149°C. The inner flue joints do not require any sealant.**

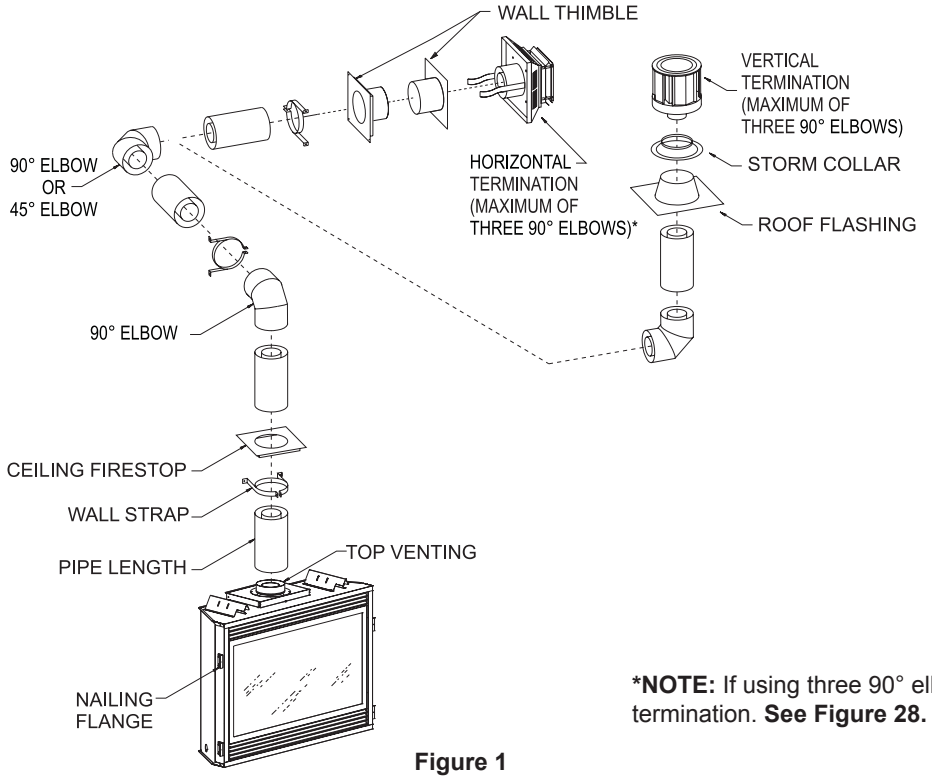

***NOTE:** If using three 90° elbows during horizontal termination. **See Figure 28.**

Figure 1

Special Venting Components (Duravent) See Empire Comfort Systems Retail Price List for Duravent part numbers and pricing.	
DVVK-4VP	Direct-Vent Fireplace Vent Kit - Vertical, Includes SD46DVA-VCH, SD46DVA-SC and SD46DVA-F6
DVVK-4TP	Direct-Vent Fireplace Vent Kit for Top Vent, Thru-the-wall, 8 to 11 inch wall thickness, Includes SD46DVA-08A, SD46DVA-09, SD46DVA-HC, SD46DVA-E90 and SD46DVA-WT
DVVK-4TSP	Direct-Vent Fireplace Vent Kit for Top Vent, Thru-the-wall, 5 to 7 inch wall thickness, Includes SD46DVA-06, SD46DVA-HC, SD46DVA-E90 and SD46DVA-WT
DVVK-4FV *	Direct-Vent Fireplace Vertical Flex Vent Kit
DVVK-4F *	Direct-Vent Fireplace Horizontal Flex Vent Kit
DVVK-4RE *	Direct-Vent Fireplace Vent Kit, Thru-the-wall, 5 to 13 3/4 inch wall thickness
Special DV Vent Kits for DVX42 Available from Empire Comfort Systems, Inc. dealers.	
DVVK-5RP	Direct-Vent Fireplace Vent Kit for Rear Vent, 6 to 12 inch wall thickness, Includes SD58DVA-06, SD58DVAWTEC, and SD58DVAHC
DVVK-5TP	Direct-Vent Fireplace Vent Kit for Top Vent, Thru-the-wall, 4 to 6 inch wall thickness, Includes SD58DVA-E90, SD58DVA-HC, SD58DVA-06, and SD58DVAWTEC
DVVK-5VP	Direct Vent Fireplace Vent Kit - Vertical, Includes SD58DVA-VCH, SD58DVA-SC, and SD58DVA-F6
DVVK-5F *	Horizontal Flex Vent Kit (4' Flex) (1.22m)

NOTE: DVX42FP appliances can use the DVVK-4 vent systems only if using a DVA47 adaptor with Duravent Pro venting.

FIREPLACE DIMENSIONS

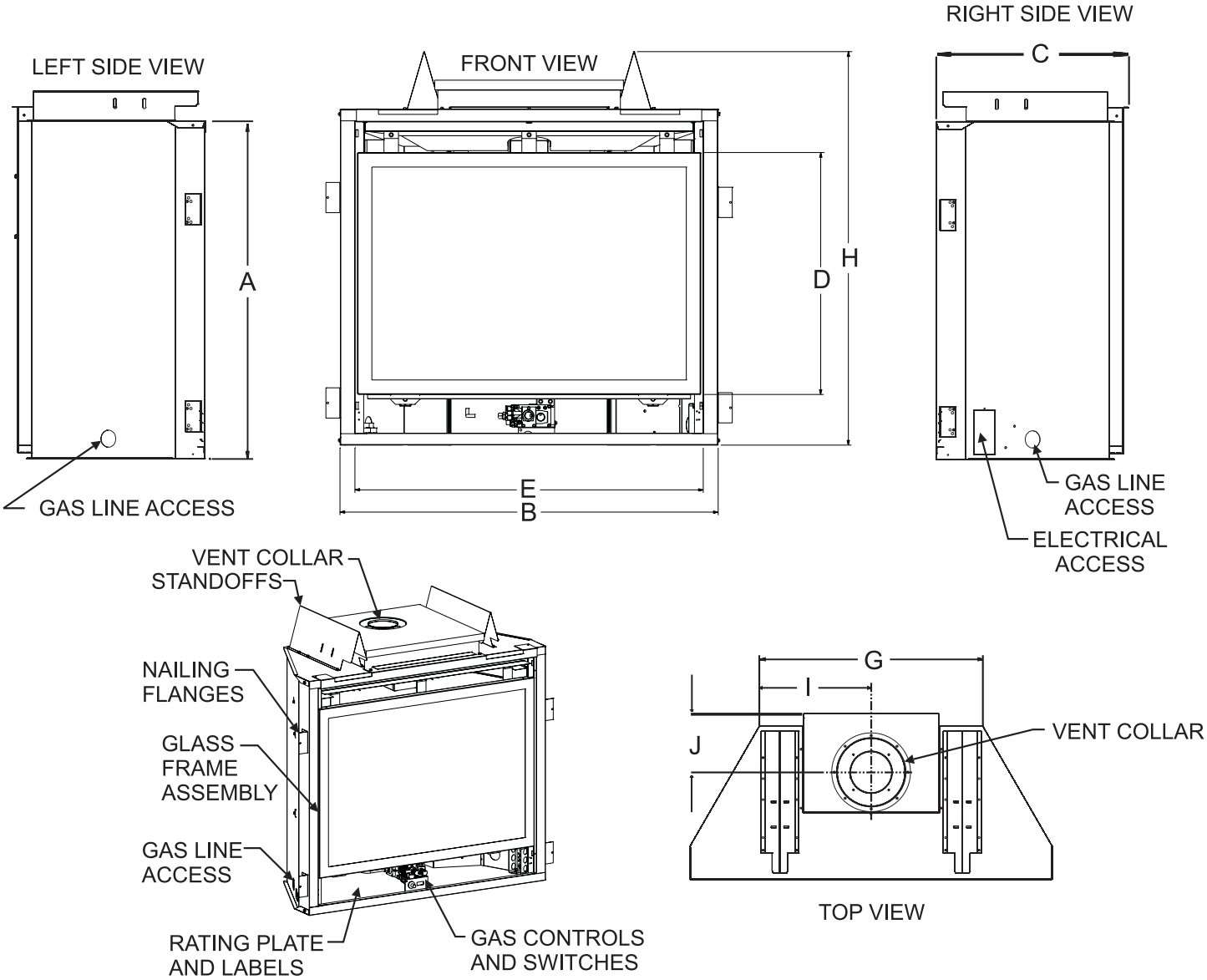

DIMENSION	DVX36FP	DVX42FP
A	34 3/4" (882.7 mm)	34 3/4" (882.7 mm)
B	39" (990.6 mm)	43" (1092.2 mm)
C	19 7/8" (505 mm)	19 7/8" (505 mm)
D	25" (635 mm)	25" (635 mm)
E	36" (914.4 mm)	40" (1016 mm)
G	26 1/2" (673.1 mm)	26 1/2" (673.1 mm)
H	40 3/4" (1035.1 mm)	40 3/4" (1035.1 mm)
I	13 1/4" (336.6 mm)	13 1/4" (336.6 mm)
J	7 1/8" (181 mm)	7 1/8" (181 mm)

Figure 2

CLEARANCES

CLEARANCE TO COMBUSTIBLES	
Back	0" (0 mm)
Side	0" (0 mm)
Floor	0" (0 mm)
Top Stand-off	0" (0 mm)
Top Framing Edge	6" (152 mm)

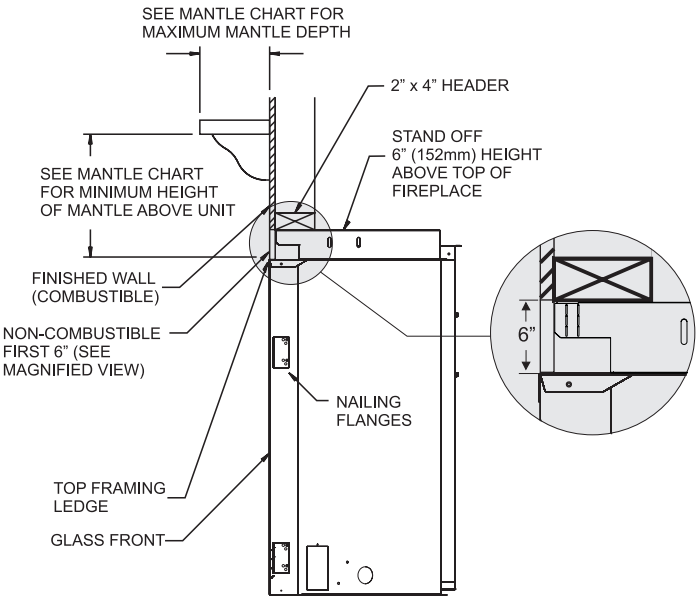

NOTE A: See Figure 5 for maximum mantel depth.
NOTE B: See Figure 5 for minimum height above unit.

Figure 3

Combustible Material
No greeting cards, stockings or ornamentation of any type should be placed on or attached to the fireplace. The flow of heat can ignite combustibles.

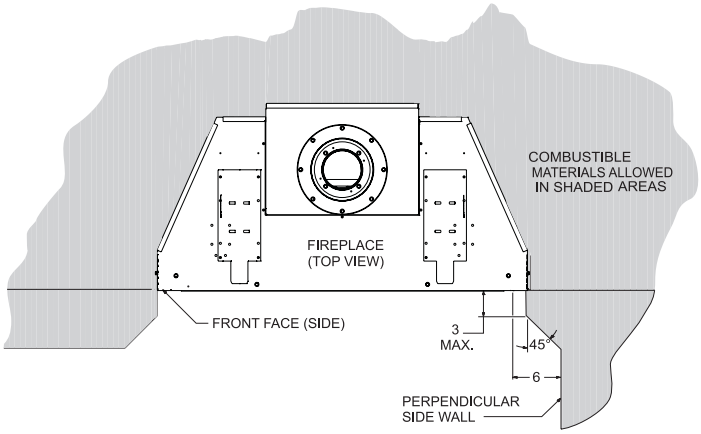

Figure 4

Mantel Chart

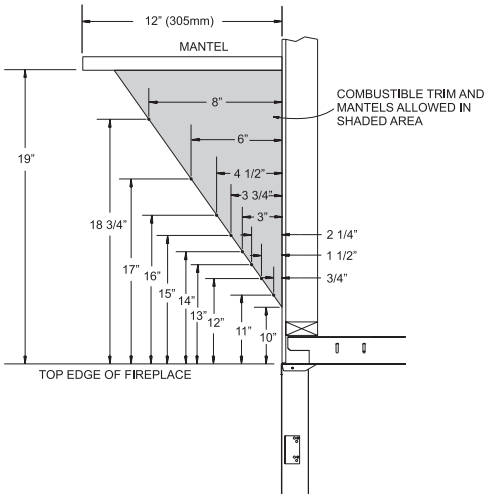

Figure 5

Clearances
Clearance from top front edge of fireplace to ceiling is 36"
Clearance from side of fireplace to adjacent sidewall is 6". **See Figure 6.**

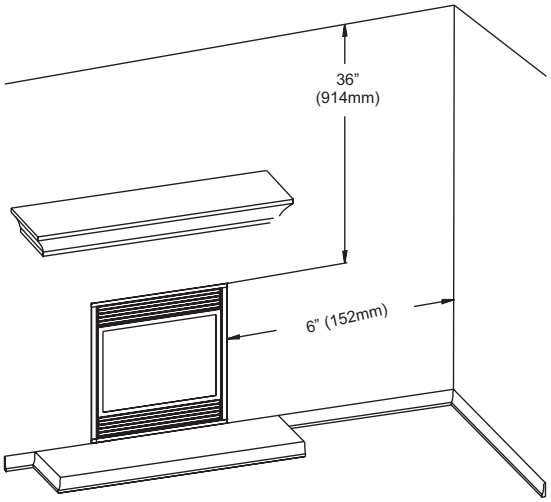

Figure 6

LOCATING FIREPLACE

NOTICE: Island and Room Divider installation is possible as long as the horizontal portion of the vent system does not exceed 20 feet with a minimum vertical run of 8 feet. See details in Venting Section.

When you install your Direct Vent Fireplace in Room divider or Flat on wall corner positions, a minimum of 6 inches clearance must be maintained from the perpendicular wall and the front edge of the appliance.

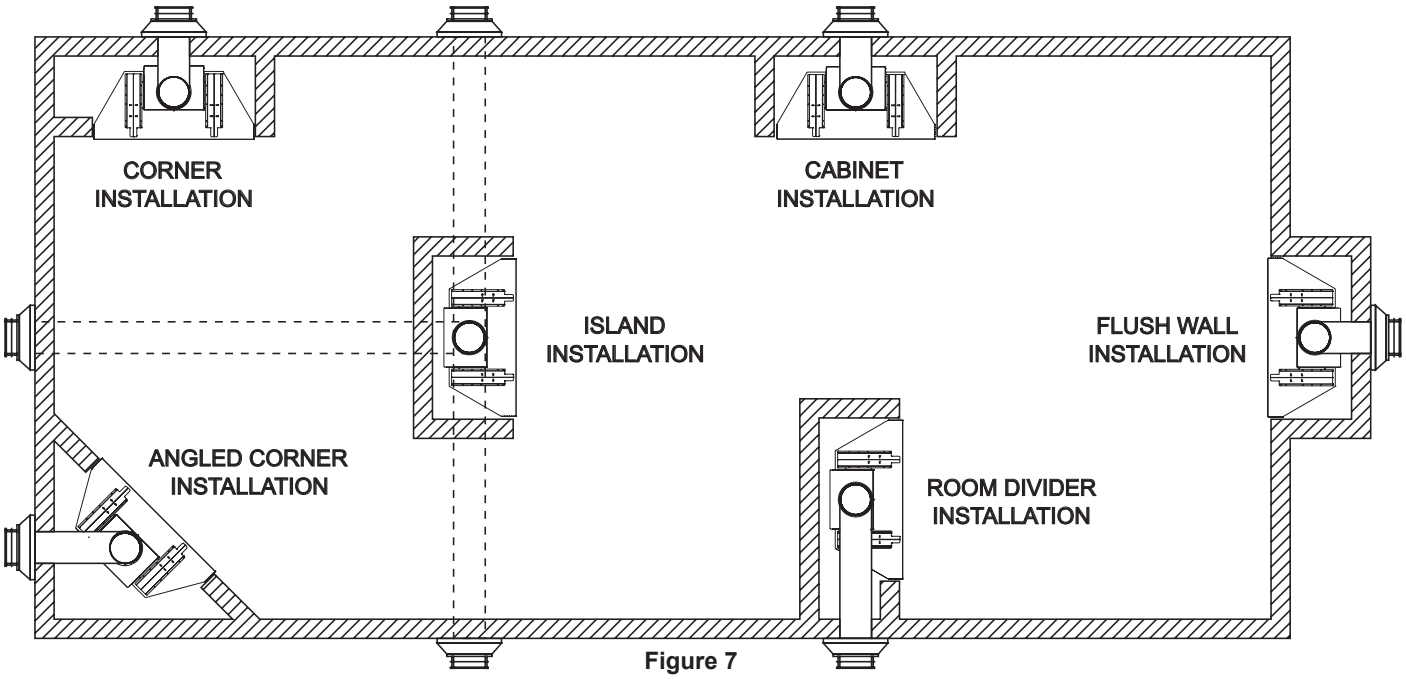

Figure 7

GAS SUPPLY

The gas pipeline can be brought in through the right or left side of the appliance. Consult the current National Fuel Gas Code, ANSI Z223.1 CAN/CGA-B149 (.1 or .2) installation code.

Recommended Gas Pipe Diameter				
Pipe Length	Schedule 40 Pipe Inside Diameter		Tubing, Type L Outside Diameter	
	Natural	Propane	Natural	Propane
0-10ft 0-3m	1/2" 12.7mm	3/8" 9.5mm	1/2" 12.7mm	3/8" 9.5mm
11-40ft 4-12m	1/2" 12.7mm	1/2" 12.7mm	5/8" 15.9mm	1/2" 12.7mm
41-100ft 13-30m	1/2" 12.7mm	1/2" 12.7mm	3/4" 19mm	1/2" 12.7mm
101-150ft 31-46m	3/4" 19mm	1/2" 12.7mm	7/8" 22.2mm	3/4" 1.9 mm

NOTICE: Never use plastic pipe. Check to confirm whether your local codes allow copper tubing or galvanized.

NOTICE: Since some municipalities have additional local codes, it is always best to consult your local authority and installation code.

The use of the following gas connectors is recommended:

— ANS Z21.24 Appliance Connectors of Corrugated Metal Tubing and Fittings.

— ANS Z21.45 Assembled Flexible Appliance Connectors of Other Than All-Metal Construction

The above connectors may be used if acceptable by the authority having jurisdiction. The Commonwealth of Massachusetts requires that a flexible appliance connector cannot exceed three feet in length.

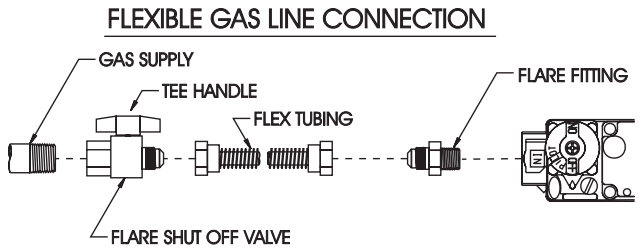

Figure 8

	Gas Supply Pressure (inches w.c.)		
	Minimum	Normal	Maximum
Natural Gas	4.5"	7.0"	*14.0"
Propane Gas	10.8"	11.0"	14.0"
	Manifold Pressure (inches w.c.)		
	Normal (HI)		
Natural Gas	3.5"		
Propane Gas	10.0"		

***NOTE: Remote "RF" Models - 10.5" w.c. maximum**

Installing a New Main Gas Shut-Off

Each appliance should have its own manual gas shut-off.

A manual main gas shut-off should be located in the vicinity of the unit. Where none exists, or where its size or location is not adequate, contact your local authorized installer for installation or relocation.

Compounds used on threaded joints of gas piping shall be resistant to the action of liquefied petroleum gases. The gas lines must be checked for leaks by the installer. This should be done with a soap solution watching for bubbles on all exposed connections, and if unexposed, a pressure test should be made.

Never use an exposed flame to check for leaks. Appliance must be disconnected from piping at inlet of control valve and pipe capped or plugged for pressure test. Never pressure test with appliance connected; control valve will sustain damage!

NOTICE: The millivolt gas controls are equipped with a captured screw type pressure test point, therefore it is not necessary to provide a 1/8" test point up stream of the control.

When using copper or flex connector use only approved fittings.

The appliance and it's individual shut-off valve must be disconnected from supply piping system during any pressure testing of that system at test pressures in excess of 1/2 psig (3.5kPa).

The appliance must be isolated from the gas supply piping system by closing its individual manual shut-off valve during any pressure testing of the gas supply piping system at test pressures equal to or less than 1/2 psig (3.5kPa).

⚠ CAUTION

If one of the procedures results in pressures in excess of 1/2 psig (14" w.c.) (3.5 kPa) on the fireplace gas valve, it will result in a hazardous condition.

Checking Manifold Pressures

Both Propane and Natural Gas valves have a built-in pressure regulator in the gas valve. Natural Gas models will have a manifold pressure of approximately 3.5" w.c. (.871kPa) at the valve outlet with the inlet pressure to the valve from a minimum of 4.5" w.c. (1.120kPa) for the purpose of input adjustment to a maximum of 14.0" w.c. (3.484kPa). Propane Gas models will have a manifold pressure approximately 10.0" w.c. (2.49kPa) at the valve outlet with the inlet pressure to the valve from a minimum of 10.8" w.c. (2.68kPa) for the purpose of input adjustment to a maximum of 14.0" w.c. (3.484kPa).

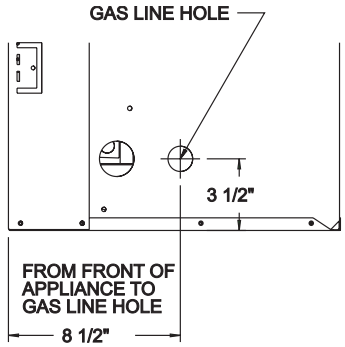

Figure 9

Framing and Finishing

1. Choose unit location.
2. Frame in fireplace with a header across the top. It is important to allow for finished face when setting the depth of the frame. **See Figure 10B.**
3. Attach fireplace to frame using nailing flange. Preset depth to suit facing material (adjustable to 1/2", 5/8" or 3/4" depths).

NOTICE: Fireplace must mount flush to facing material. If facing material requires more depth than 3/4" mark and drill two 1/8" holes into fireplace side at appropriate depth. **See Figure 10A.**

4. Use eight 1/2" hex-head screws supplied in hardware package, to screw through slotted holes in nailing flange and then screw into pre-drilled holes on fireplace side. Measure from face of fireplace to face of nailing flange to determine final depth.

Vent Pipe Clearance

NOTICE: Maintain one inch of clearance around top vent pipe. **See Figure 11.** For rear vent, maintain a minimum 1" clearance to the bottom and sides of the vent, and three inch clearance to combustibles above the vent pipe. **See Figure 12.**

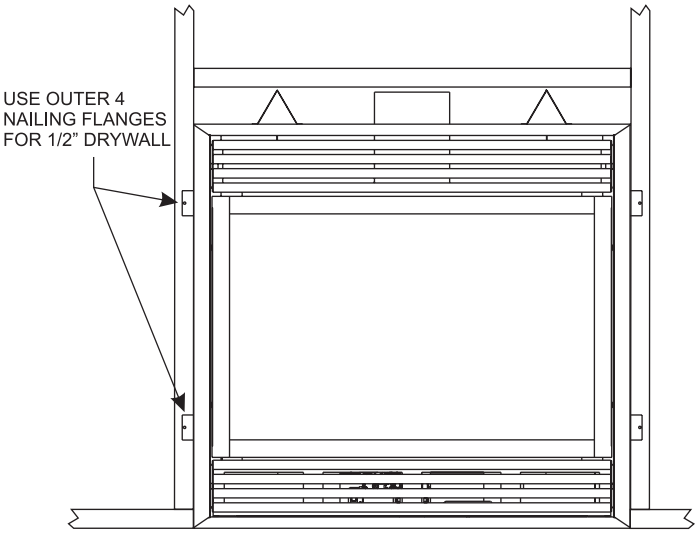

Figure 10A

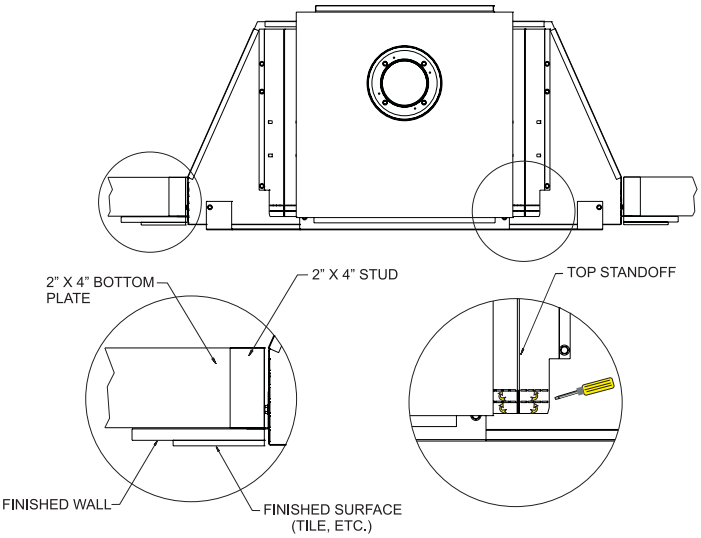

Figure 10B

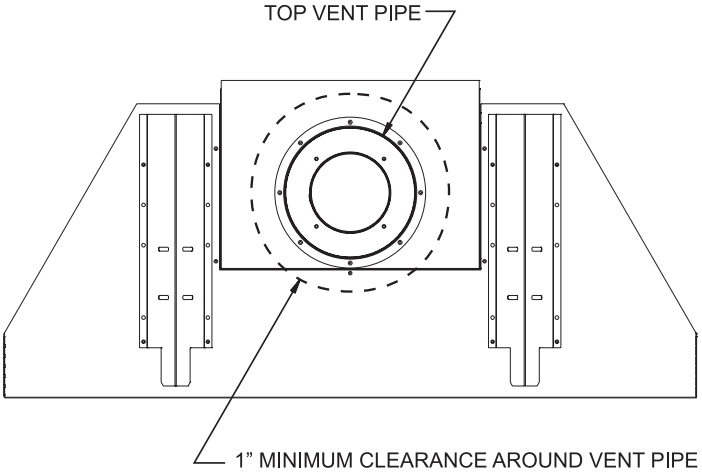

Figure 11 - Top Vent

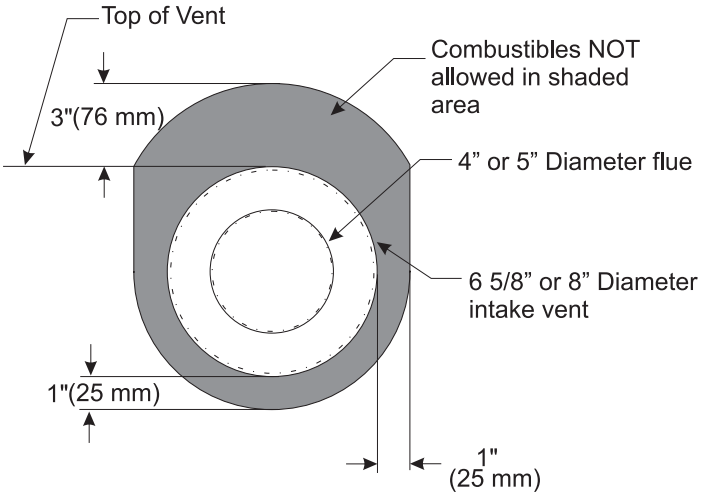

Figure 12 - Rear Vent

Flush Mount Mantel Installation

The fireplace must extend 3/4" beyond finished wall surface when using a flush mount mantel. Refer to **Figure 13** to locate nailing flanges on fireplace sides. Mark and drill two 1/8" holes into fireplace side to mount each nailing flange. Use eight 1/2" hex-head screws supplied in hardware package to attach nailing flanges to fireplace sides.

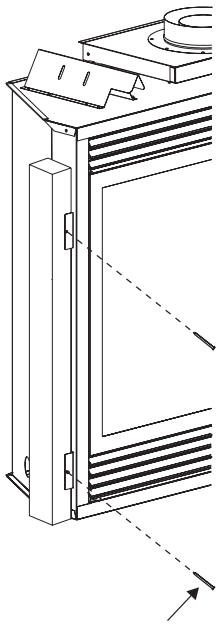

Figure 13

Attention: When fireplace is installed in optional full cabinet mantel or corner mantel the four nailing flanges shown in **Figure 13** will not be installed on the side of outer casing. The fireplace will be attached to the full cabinet mantel or corner mantel with the two nailing flanges located on the top of the outer casing assembly.

Framing

Fireplace framing can be built before or after the fireplace is set in place. Framing should be positioned to accommodate wall covering and fireplace facing material. The fireplace framing should be constructed of 2 x 4 lumber or heavier. The framing headers may rest on the fireplace standoffs. Refer to **Figure 14** for minimum framing dimensions.

⚠ CAUTION

Measure fireplace dimensions and verify framing methods, and wall covering details before framing construction begins.

Framing dimension "A" includes a six inch clearance for standoffs on firebox. After installing firebox into framing, the finished wall surface must cover the six inch opening above the firebox.

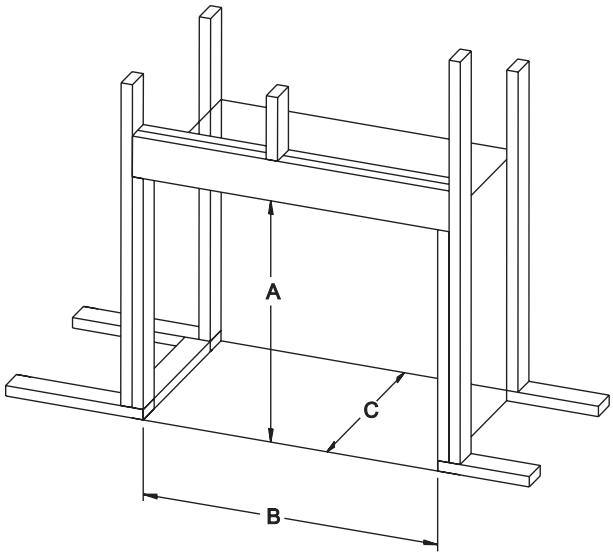

	DVX36	DVX42
"A"	40 7/8"	40 7/8"
"B"	39 3/8"	43 3/8"
"C"	19 7/8"	19 7/8"

Attention: Add 3-3/4" to "A" dimensions when using a flush mantel base.

Figure 14

⚠ WARNING

If a base or mantel is not used and the appliance is installed directly on carpeting, tile or other combustible material other than wood flooring, it shall be installed on a metal or wood panel extending the full width and depth of the appliance. The vertical dimension in Figure 14 must be adjusted when a metal or wood panel is placed beneath the appliance.

Finishing - See Figures 15 and 16

Finish the walls with the material of your choice. **Figure 5** on page 10 shows the minimum vertical and corresponding maximum horizontal dimensions of mantels or other combustible projections above the top front edge of the fireplace.

Only non-combustible materials may be used to cover the black fireplace front.

⚠ WARNING

When finishing the fireplace never obstruct or modify the air inlet/outlet louvers in any manner. Provide adequate clearances around air openings into the combustion chamber.

⚠ CAUTION

If the joints between the finished wall and the fireplace surround (top and sides) are sealed, a 300°F minimum sealant material must be used. These joints are not required to be sealed. Only non-combustible material (using 300°F minimum adhesive if needed), can be applied as facing to the fireplace surround.

Flush Wall Installation

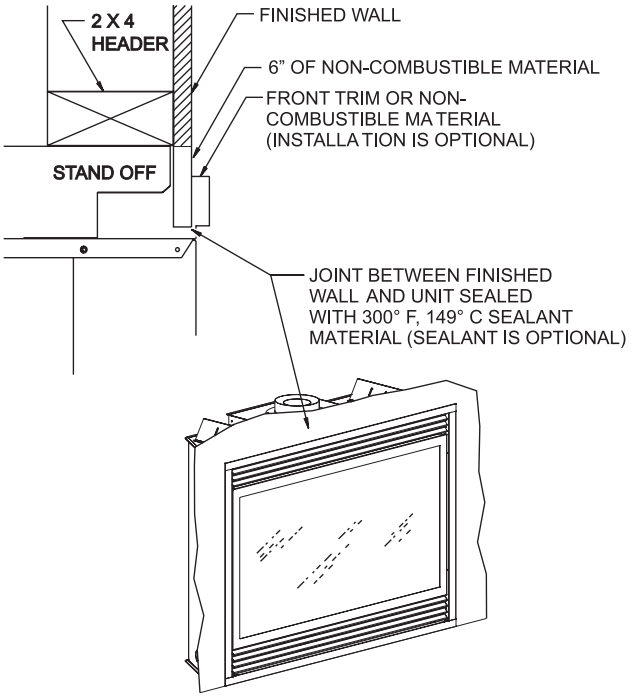

Figure 15

Combustible Surround Installation

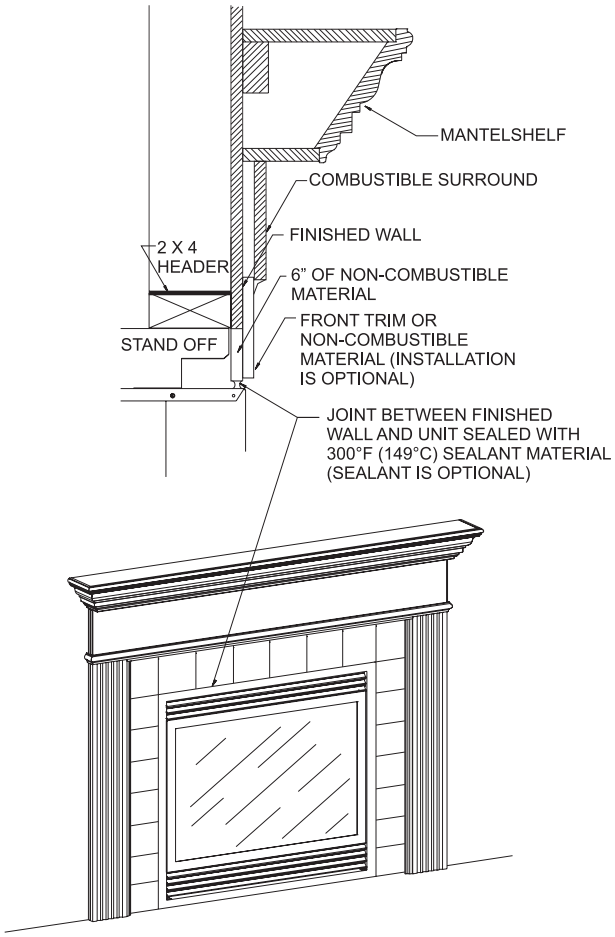

Figure 16

Attention: Cold climate installation recommendation: When installing this unit against a non-insulated exterior wall, it is recommended that the outer walls be insulated to conform to applicable insulation codes.

Vent Runs

In planning the installation for the fireplace, it is necessary to install certain components before the appliance is completely positioned and installed. These include the direct vent system, gas piping for the appliance and the electrical wiring. (If the fan option is used.)

The appliance can be mounted on any of the following surfaces:

1. A flat, hard combustible (burnable) surface.
2. A raised wooden platform.
3. Four corner supports. (Example: Four concrete masonry blocks.) These supports must be positioned so they contact all four perimeter edges on the bottom of the unit (if allowed by local codes).

TOP, 90° ELBOW WITH HORIZONTAL TERMINATION

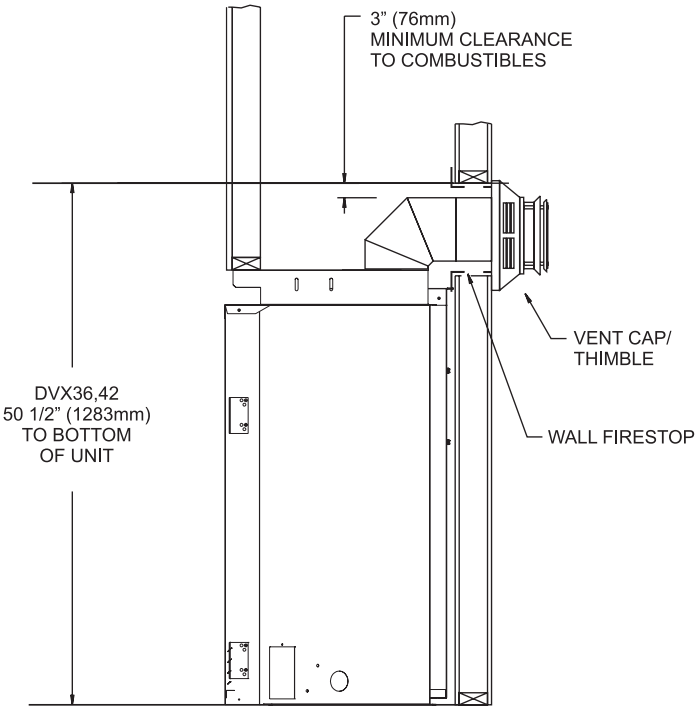

Figure 17

TOP, 90° ELBOW TO HORIZONTAL OUT THE WALL

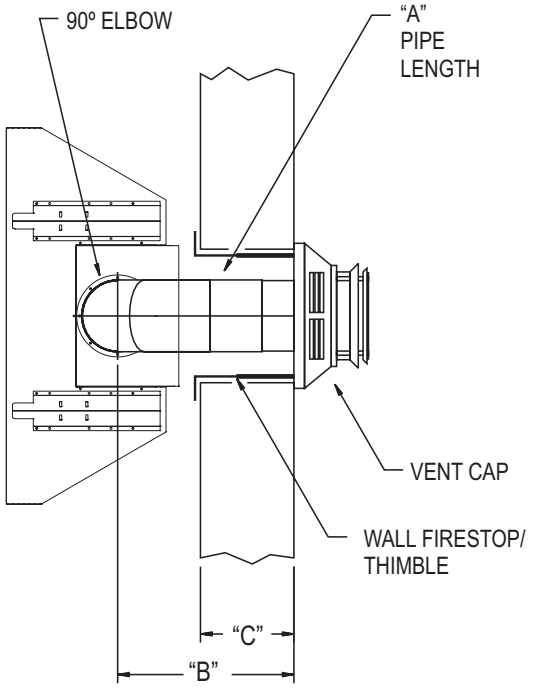

"A"	"B"	"C"
6"(152mm)	11 1/4"(286mm) to 12 3/4"(324mm)	4 3/4"(121mm) to 6 1/4"(159mm)
9"(229mm)	14 1/4"(362mm) to 15 3/4"(400mm)	7 3/4"(197mm) to 9 1/4"(235MM)
12"(305mm)	17 1/4"(438mm) to 18 3/4"(476mm)	10 3/4"(273mm) to 12 1/4"(311mm)

Figure 18

CORNER INSTALLATION TOP, 90° ELBOW TO HORIZONTAL OUT THE WALL

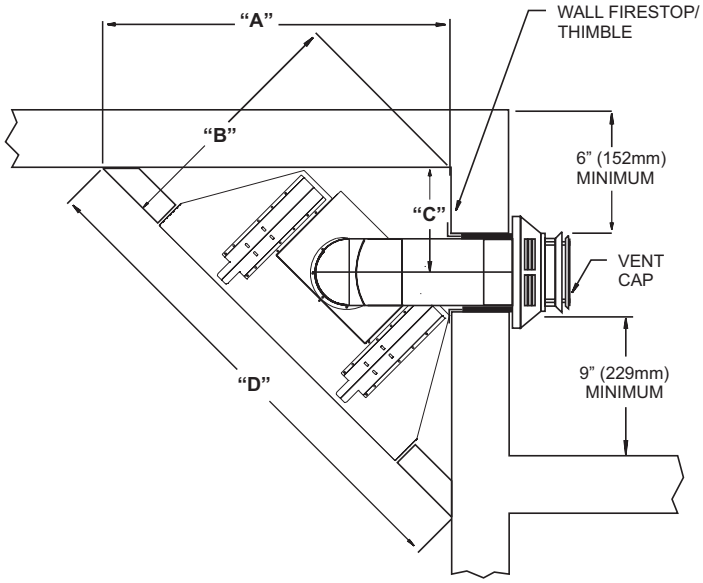

Dim.	DVX36	DVX42
A	45 3/8" (1152mm)	49 5/8" (1260mm)
B	32 1/8" (816mm)	35 1/8" (892mm)
C	13 3/8" (34 mm)	15 1/2" (39 mm)
D	64 1/8" (1628mm)	70 1/8" (1781mm)

Figure 19

To Use the Vent Graph

1. Determine the height of the center of the horizontal vent pipe. Using this dimension on the Sidewall Vent Graph, locate the point it intersects with the slanted graph line.
2. From the point of this intersection, draw a vertical line to the bottom of the graph.
3. Select the indicated dimension, and position the unit in accordance with same.

EXAMPLE A:
If the vertical dimension from the floor of the unit is 35 feet, the horizontal run to the outer wall flange must not exceed 6.5 feet.

EXAMPLE B:
If the vertical dimension from the floor of the unit is 6.5 feet, the horizontal run to the outer wall flange must not exceed 14.5 feet.

Special Note: For each 45 degree elbow installed in the horizontal run, the length of the horizontal run MUST be reduced by 18" (45cm). This does not apply if the 45 degree elbows are installed on the vertical part of the vent system. Reduce 3' for every 90° elbow.

Example: According to the chart the maximum horizontal vent length is 20' and if two 45 degree elbows are required in the horizontal vent it must be reduced to 17'.

The maximum number of 45 degree elbows permitted per side wall installation is two. These elbows can be installed in either the vertical or horizontal run.

NOTE: On vertical venting the first elbow does not get counted.

Venting Graph (Dimensions in Feet)

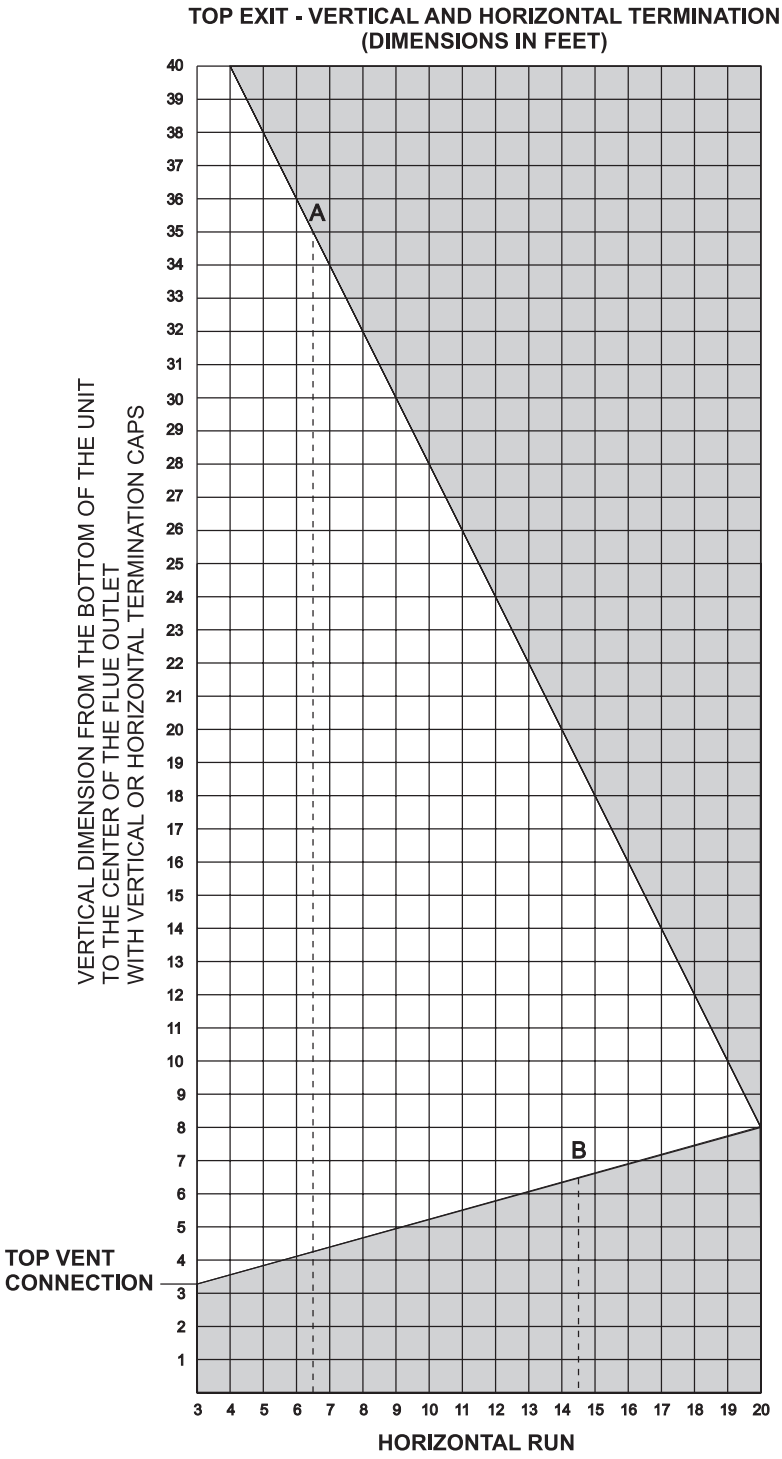

Acceptable vertical and horizontal vent run.
(40' maximum vertical and 20' maximum horizontal)

Unacceptable vertical and horizontal vent run.

Figure 20

Below Grade Installation

When it is not possible to meet the required vent terminal clearances of 12" (305mm) above grade level, a snorkel kit is recommended. It allows installation depth down to 7" (178mm) below grade level. The 7" (178mm) is measured from the center of the horizontal vent pipe as it penetrates through the wall.

Ensure the sidewall venting clearances are observed. If venting system is installed below ground, we recommend a window well with adequate and proper drainage to be installed around the termination area.

TYPICAL BASEMENT INSTALLATION

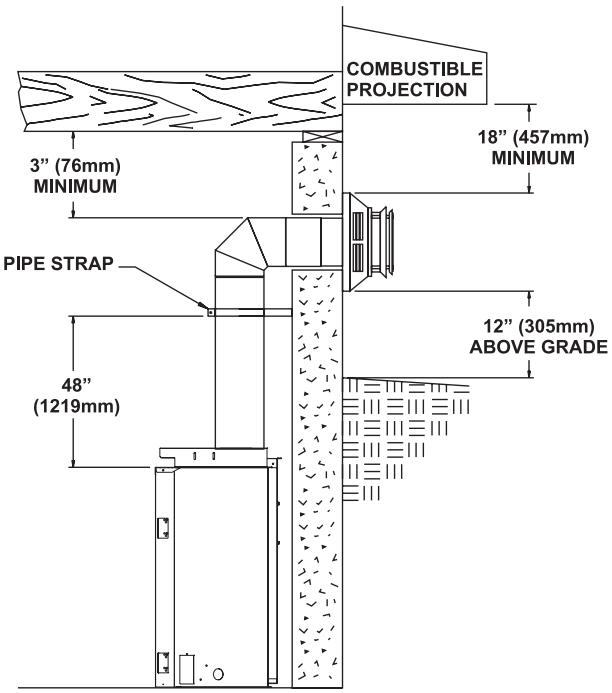

Figure 21

Examples of possible venting systems using one 90° elbow. Eight feet is listed as minimum vertical vent run with 20 feet of maximum horizontal vent run. Vertical dimensions are based on centerline to centerline of pipe. Horizontal dimensions are based on centerline of pipe to end of termination.

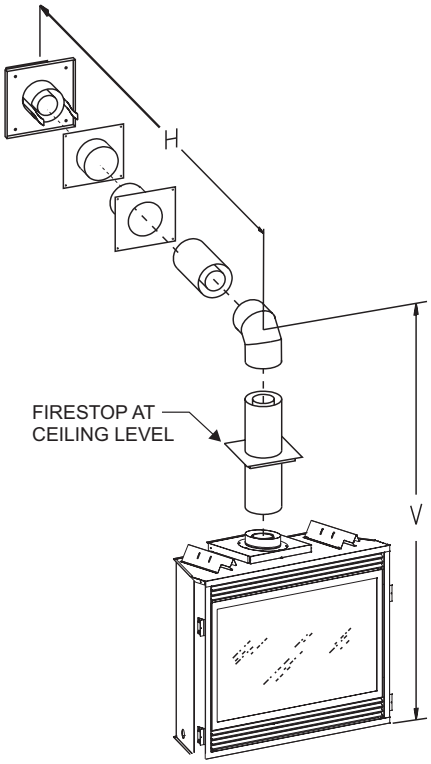

SEE GRAPH FOR PERMISSIBLE "H" AND "V" DIMENSIONS

Figure 22

Examples of possible venting systems using two 90° elbows. V is listed as minimum vertical dimensions and H1 + H2 is listed as total of maximum horizontal dimensions. The maximum vertical and horizontal distances for two 90° elbows as shown in **Figure 23** is 22 feet.

Attention: Refer to **Figure 20** for additional venting requirements.

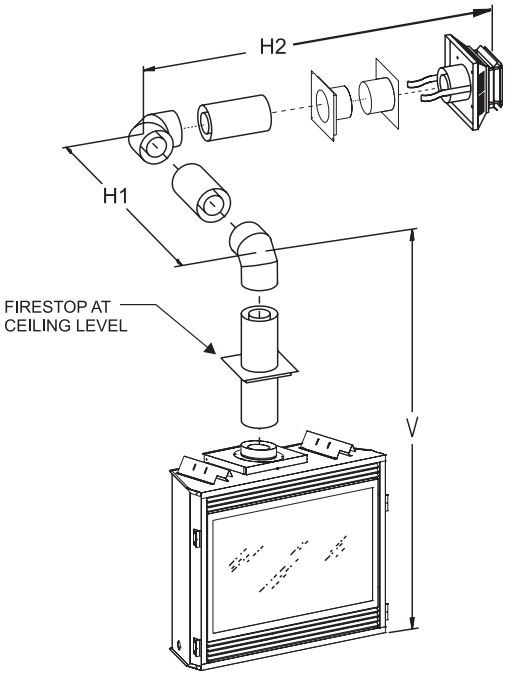

SEE GRAPH FOR PERMISSIBLE "H" AND "V" DIMENSIONS
NOTE: H1 AND H2 MUST BE ADDED TOGETHER TO USE CHART

Figure 23

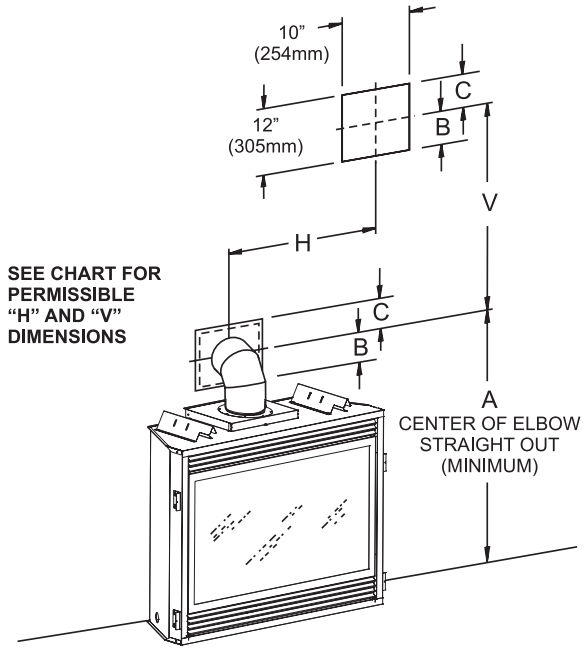

Figure 24

MINIMUM HOLE LOCATION DIMENSIONS FOR THROUGH THE WALL HORIZONTAL INSTALLATIONS WITH 90 DEGREE ELBOW OFF TOP OF FIREPLACE

FIREPLACE SERIES	HARD ELBOW DIMENSIONS		
	"A"	"B"	"C"
DVX36FP	43-1/2" (1105mm)	5" (127mm)	7" (178mm)
DVX42FP	44-3/8" (1105mm)	5" (127mm)	7" (178mm)

FIREPLACE SERIES	FLEX PIPE 90 DEGREE BEND		
	"A"	"B"	"C"
DVX36FP	46" (1143mm)	5" (127mm)	7" (178mm)
DVX42FP	46" (1143mm)	5" (127mm)	7" (178mm)

Positioning the Fireplace

Determine the exact position of the appliance so the direct vent termination will be centered (if possible) between two studs. This will avoid any extra framing. All vent kit pipes should be assembled on the unit after the unit is moved into the final position.

Cutting the Hole

After the fireplace has been positioned in its permanent location, the hole through the exterior wall of the house can be cut. This hole must be 12" (305mm) high x 10" (254mm) wide with its center line determined by the amount of vertical rise and horizontal run of the termination. **See Figure 24.** When locating the hole it must be noted that the bottom of the cap must be 12" (305mm) above the ground level, and top of the cap must be no less than 18" (457mm) below a combustible projection, and no closer than 9" (229mm) to any wall running parallel to vent termination. **See Figure 25.**

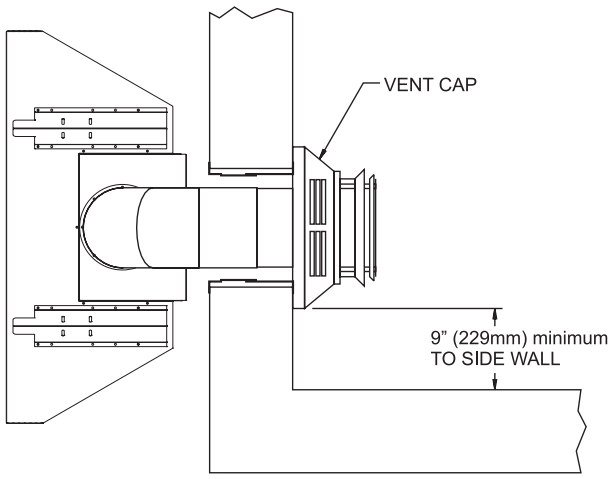

Figure 25

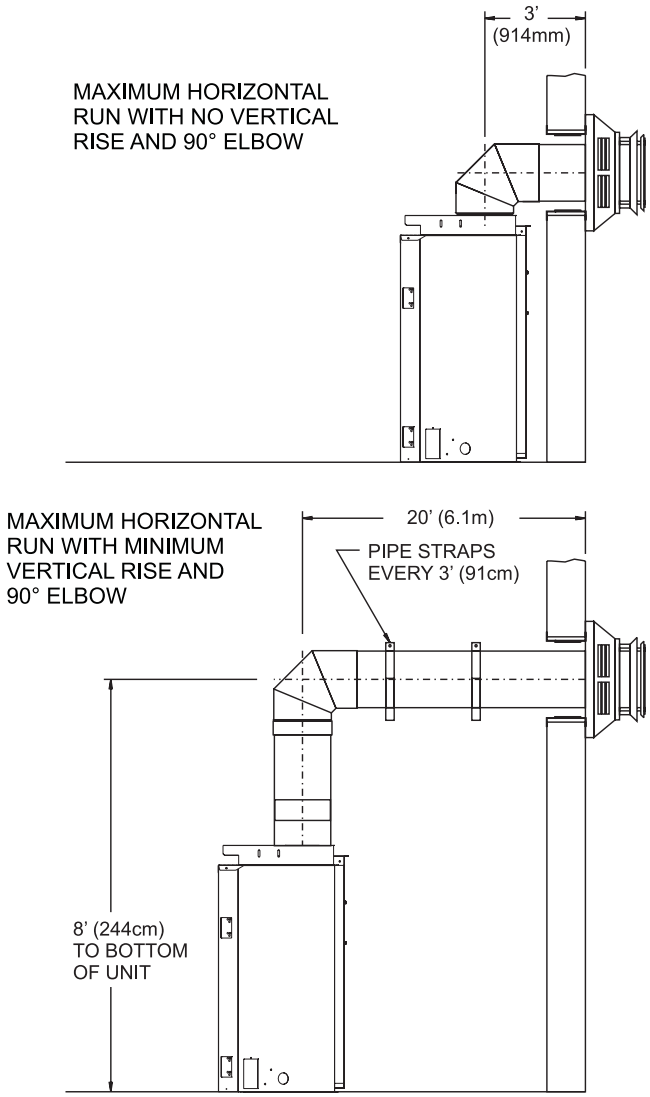

Figure 26

EXAMPLES - TOP VENT RUN

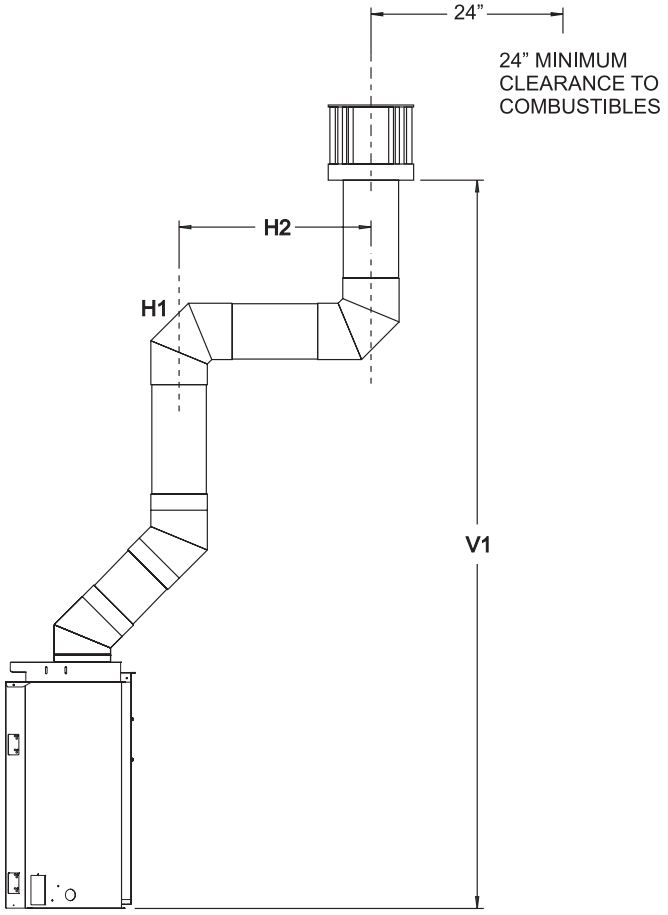

Example
H2 = 2ft
2 - (90° + 90°) = 6ft
V1 = 21ft

H = 8ft V = 15ft

Figure 27

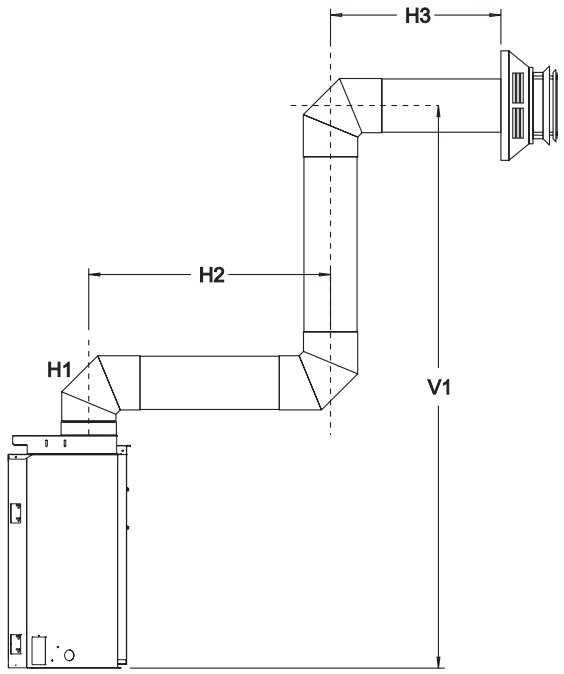

Example
H2 3ft, H3 1ft = 4ft
(90° + 90° + 90°) = 6ft
V1 = 21ft

H = 10ft V = 21ft

Figure 28

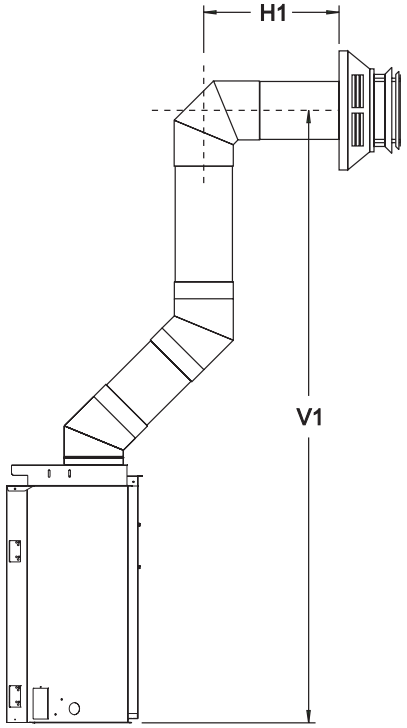

Example
H1 = 2ft
V1 = 20ft

H = 2ft V = 20ft

Figure 29

VENT CLEARANCES

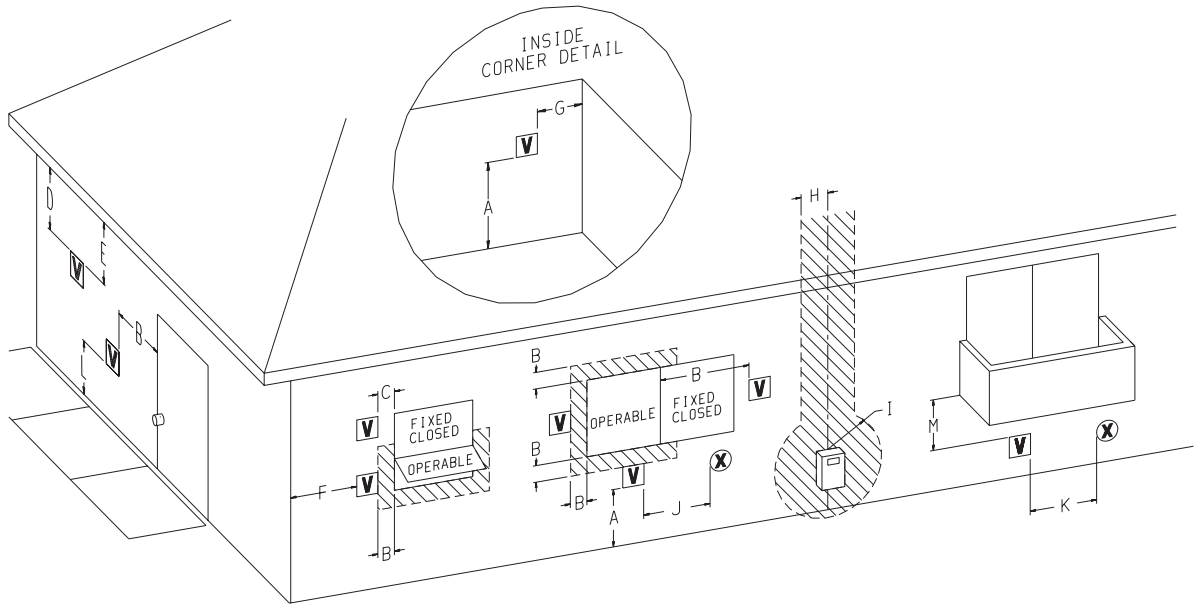

V VENT TERMINAL X AIR SUPPLY INLET AREA WHERE TERMINAL IS NOT PERMITTED

Figure 30

	Canadian Installations1	US Installations2
A= Clearance above grade, veranda, porch, deck, or balcony	12 in (30 cm)	12 in (30cm)
B= Clearance to window or door that may be open	6 in (15 cm) for appliances ≤ 10,000 Btuh (3 kW), 12 in (30 cm) for appliances > 10,000 Btuh (3 kW) and ≤ 100,000 Btuh (30 kW), 36 in (91 cm) for appliances > 100,000 Btuh (30 kW)	6 in (15 cm) for appliances ≤ 10,000 Btuh (3 kW), 9 in (23 cm) for appliances > 10,000 Btuh (3 kW) and ≤ 50,000 Btuh (15 kW), 12 in (30 cm) for appliances > 50,000 Btuh (15 kW)
C= Clearance to permanently closed window	12 in (30 cm)	12 in (30 cm)
D= Vertical clearance ventilated soffit located above the terminal within a horizontal distance of 2 feet (61 cm) from the center line of the terminal	24 in (61 cm)	24 in (61 cm)
E= Clearance to unventilated soffit	12 in (30 cm)	12 in (30 cm)
F= Clearance to outside corner	6 in (15 cm)	6 in (15 cm)
G= Clearance inside corner	9 in (23 cm)	9 in (23 cm)
H= Clearance to each side of center line extended above meter/regulator assembly	3 ft (91 cm) within a height 15 ft (4.5 m) above the meter/regulator assembly	3 ft (91 cm)

ATTENTION: Vinyl Soffit, Vinyl Ceiling, Vinyl Overhang Disclaimer

Clearances are to heat resistant material (i.e. wood, metal). This does not include vinyl. Empire Comfort Systems Inc. will not be held responsible for heat damage caused from terminating under vinyl overhangs, vinyl ceilings or vinyl ventilated/unventilated soffits.

	Canadian Installations1	US Installations2
I= Clearance to service regulator vent outlet	3 ft (91 cm)	6 ft
J= Clearance to nonmechanical air supply inlet to building or the combustion air inlet to any other appliance	6 in (15 cm) for appliances ≤ 10,000 Btuh (3 kW), 12 in (30 cm) for appliances > 10,000 Btuh (3 kW) and ≤ 100,000 Btuh (30 kW), 36 in (91 cm) for appliances > 100,000 Btuh (30 kW)	6 in (15 cm) for appliances ≤ 10,000 Btuh (3 kW), 9 in (23 cm) for appliances > 10,000 Btuh (3 kW) and ≤ 50,000 Btuh (15 kW), 12 in (30 cm) for appliances > 50,000 Btuh (15 kW)
K= Clearance to a mechanical air supply inlet	6 ft (1.83 m)	3 ft (91 cm) above if within 10 ft (3 m) horizontally
L= Clearance above paved sidewalk or paved driveway located on public property	7 ft (2.13 m) †	7 ft (2.13 m) †
M= Clearance under veranda, porch deck, or balcony	12 in (30 cm) ‡	12 in (30 cm) ‡

1	In accordance with the current CSA B149.1, Natural Gas and Propane Installation Code
2	In Accordance with the current ANSI Z223.1/NFPA 54, National Fuel Gas Code
†	A vent shall not terminate directly above a sidewalk or paved driveway that is located between two single family dwellings and serves both dwellings
‡	Permitted only if veranda,, porch, deck, or balcony is fully open on a minimum of two sides beneath the floor.
*	For clearances not specified in ANSI Z223.1/NFPA 54 or CSA B149.1, one of the following shall be indicated:

Clearance in accordance with local installation codes and the requirements of the gas supplier.

Installing Support Brackets

A horizontal pipe support MUST BE used for each 3 feet of horizontal run. The pipe supports should be placed around the pipe and nailed in place to framing members. There MUST BE a 3 inch clearance to combustibles above flue pipe and elbows and 1 inch clearance on both sides and bottom of the flue pipe to combustibles on all horizontal pipe sections and elbows.

Vertical runs of this vent systems must be supported every 4 feet above the appliance flue outlet by wall brackets attached to the vent pipe and secured with nails or screws to structural framing members.

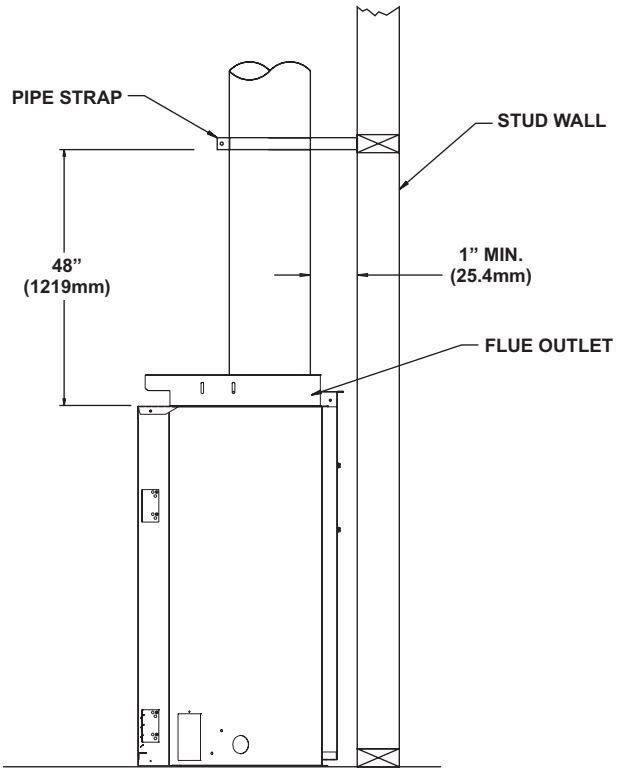

Figure 31

Installing Firestops

Firestops are required for safety whenever the vent system passes through an interior wall, an exterior wall, or a ceiling. These firestops act as a firebreak heat shield and as a means to insure that minimum clearances are maintained to the vent system.

Horizontal runs in the vent system which pass through either interior or exterior walls, require the use of wall firestops on both sides of the wall through which the vent passes.

Cut an appropriate sized hole in wall. **See Figure 34.** Position firestop on interior side of wall for hole.

Attention: Wall firestop hole is off-set towards bottom of wall opening. Secure with nails or screws. Continue the vent run through the firestop. **See Figure 32**.

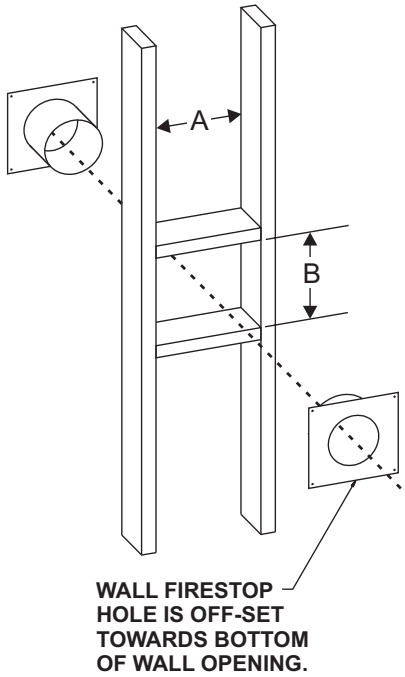

Vent Size	A	B
6 5/8"	10"	11"
8"	10 3/8"	12 3/8"

Figure 32

Vertical runs of this system which pass through ceilings require the use of one ceiling firestop at the hole in each ceiling through which the vent passes.

Position a plumb bob directly over the center of the vertical vent component and mark the ceiling to establish the center point of the vent. Drill a hole or drive a nail through this center point and check the floor above for any obstructions such as wiring or plumbing runs. Reposition the appliance and vent system, if necessary, to accommodate ceiling joists and/or obstructions.

Cut an appropriate sized hole through the ceiling, using the center point previously marked. **See Figure 33.** Frame the hole with framing lumber the same size as the ceiling joists. **See Figure 33**. If the area above the ceiling is NOT an attic, position and secure the ceiling firestop on the ceiling side of the previously cut and framed hole. **See Figure 34**. If the area above the ceiling is an attic, position and secure the firestop on top of the previously framed hole. **See Figure 35.**

NOTE: Remove insulation from the framed area in the attic before installing the firestop and/or vent pipes.

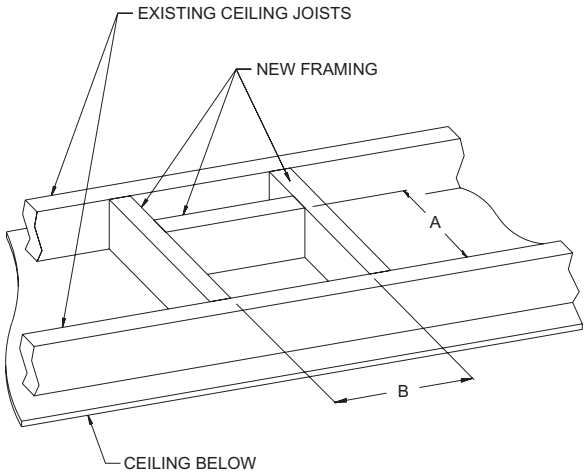

Vent Size	A	B
6 5/8"	10"	10"
8"	10 1/2"	10 1/2"

Figure 33

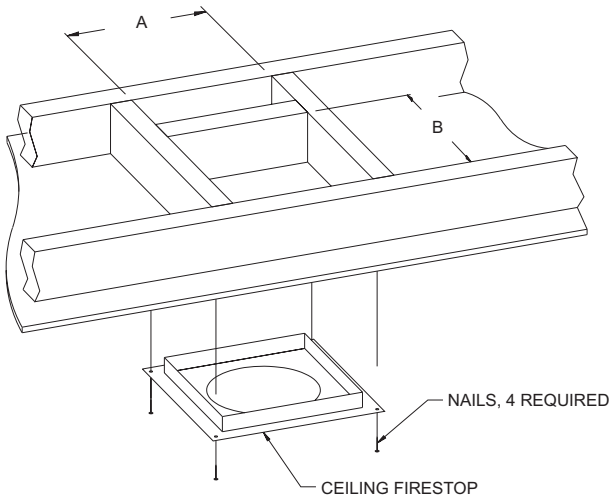

Vent Size	A	B
6 5/8"	10"	10"
8"	10 1/2"	10 1/2"

Figure 34

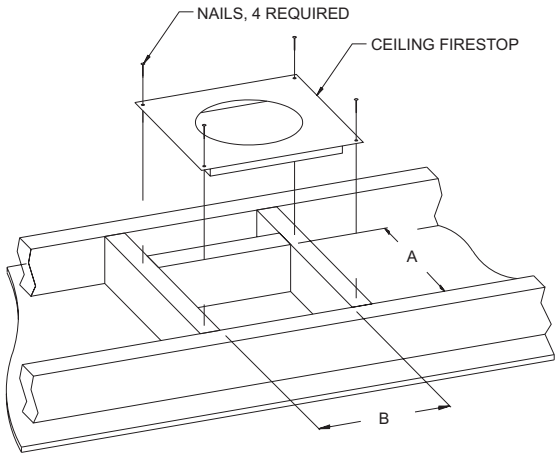

VENT SIZE	A	B
6 5/8"	10"	10"
8"	10 1/2"	10 1/2"

Figure 35

See **Horizontal Termination** Page 26 and **Vertical Termination** Pages 27 and 28.

TERMINATION CLEARANCES

Termination clearance for buildings with combustible and noncombustible exteriors.

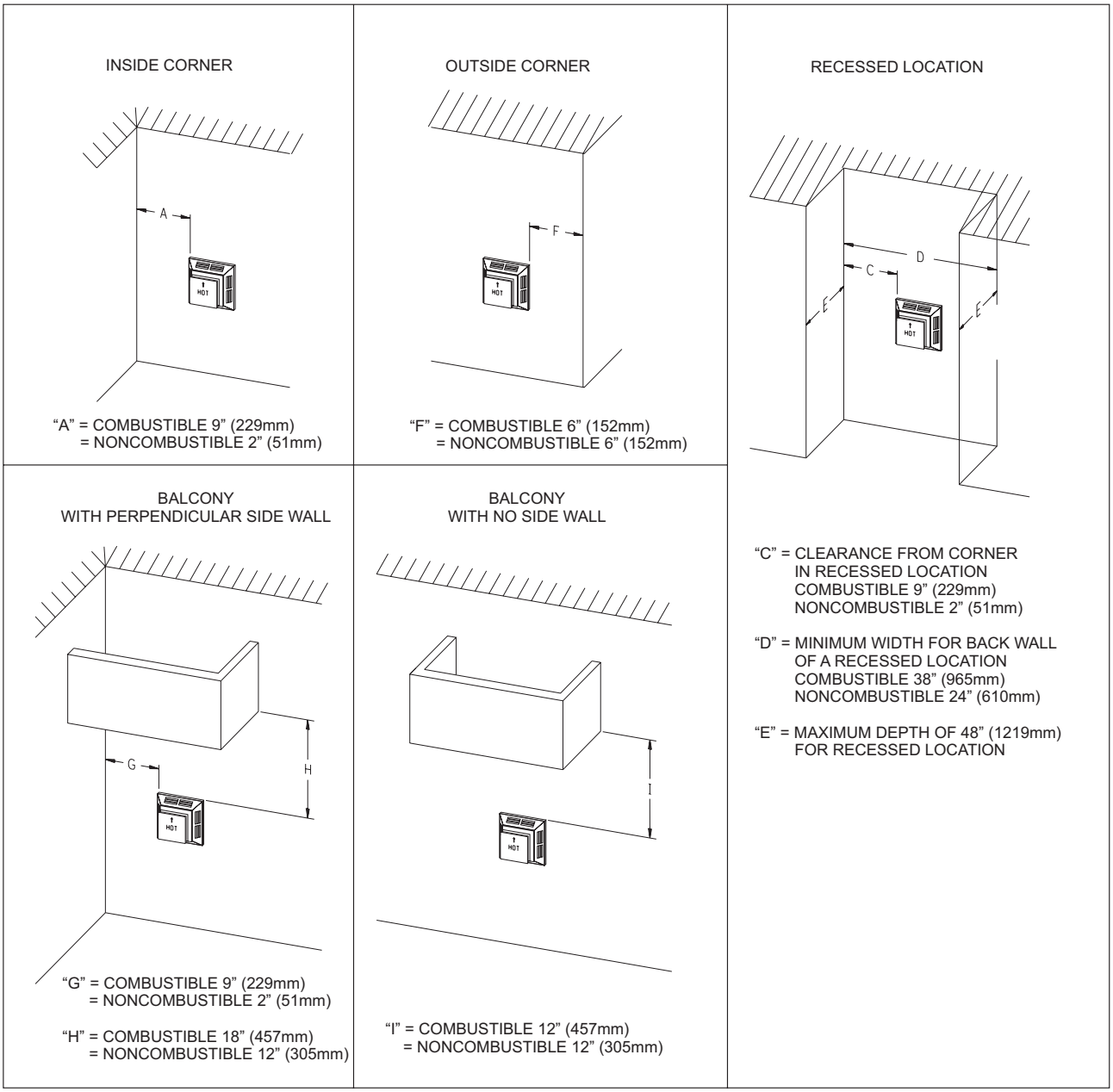

Figure 36

Vertical Sidewall Installations

Important! Minimum clearance between vent pipes and combustible materials is three inches (76mm) on top, and one inch (25mm) on bottom and sides.

Important! When vent termination exits through foundation less than 20" below siding outcrop, the vent pipe must extend outward so that the horizontal vent terminal is located flush to, or beyond the outcrop siding.

Information on Various Venting Routes and Components

Important: It is always best to locate the fireplace in such a way that minimizes the number of offsets and horizontal vent length.

Since it is very important that the venting system maintain its balance between the combustion air intake and the flue gas exhaust, certain limitations as to vent configurations apply and must be strictly adhered to.

The graph showing the relationship between vertical and horizontal side wall venting will help to determine the various vent lengths allowable.

The horizontal vent run refers to the total length of vent pipe from the flue collar of the fireplace to the face of the outer wall.

The maximum horizontal vent run is 20 feet (457 cm) when the vertical vent rise is 8 feet (244 cm). **See Figure 20.**

Venting terminals shall not be recessed into wall or siding.

HORIZONTAL TERMINATION

NOTE: Termination cap should pass through the wall firestop from the exterior of the building. Adjust the termination cap to its final exterior position on the building.

⚠ WARNING

Termination cap must be positioned so that arrow is pointing up.

Attach the termination cap with the four wood screws provided. Before attachment of the termination, run a bead of silicone sealant rated above 250°F on its outside edge too, so as to make a seal to the exterior wall.

NOTICE: Wood screws can and should be replaced with appropriate fasteners for use on stucco, brick, concrete or other types of siding.

⚠ CAUTION

If exterior walls are finished with vinyl siding, (or materials that could become discolored or warp) it is necessary to install a vinyl siding standoff.

The vinyl siding standoff will be installed between the vent termination and the exterior wall. **See Figure 37.** This horizontal vent termination bolts onto the flat portion of the vinyl siding standoff, so an air space will exist between the wall and the termination cap.

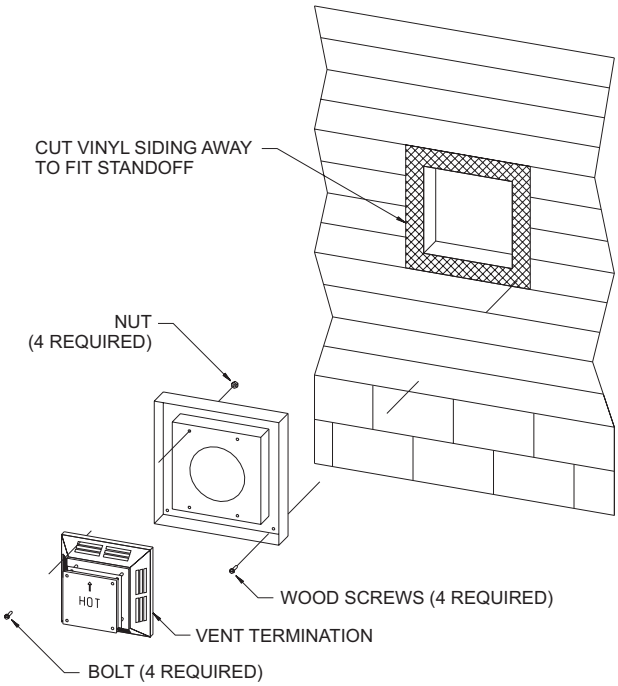

Figure 37

VERTICAL TERMINATION

Locate and mark the center point of the venting pipe. Using a nail on the underside of the roof and drive this nail through this center point. Make the outline of the roof hole around this center point.

NOTE: Size of the roof hole dimensions depend on the pitch of the roof. There must be a 1 inch clearance (25mm) to the vertical pipe sections. This clearance is to all combustible material.

Cover the opening of the vent pipe and cut and frame the roof hole. Use framing lumber the same size as the roof rafters and install the frame securely. Flashing anchored to frame must withstand high winds. The storm collar is placed over this joint to make a water-tight seal. Non-hardening sealant should be used to completely seal this flashing installation.

Determining Minimum Vent Height Above the Roof.

⚠ WARNING

Major U.S. building codes specify minimum chimney and/or vent height above the roof top. These minimum heights are necessary in the interest of safety. These specifications are summarized in Figure 38.

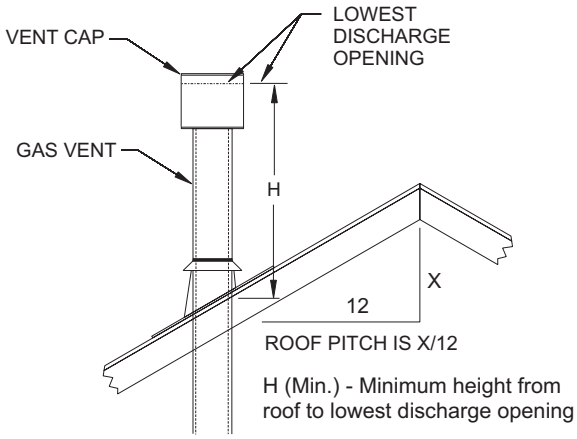

ROOF PITCH	H (MIN.)
Flat to 6/12	12" (305 mm)
6/12 to 7/12	15" (381 mm)
Over 7/12 to 8/12	18" (457 mm)
Over 8/12 to 16/12	24" (610 mm)
Over 16/12 to 21/12	36" (914 mm)

Figure 38

Note that for steep roof pitches, the vent height must be increased. In high wind conditions, nearby trees, adjoining roof lines, steep pitched roofs, and other similar factors can result in poor draft, or down-drafting. In these cases, increasing the vent height may solve this problem.

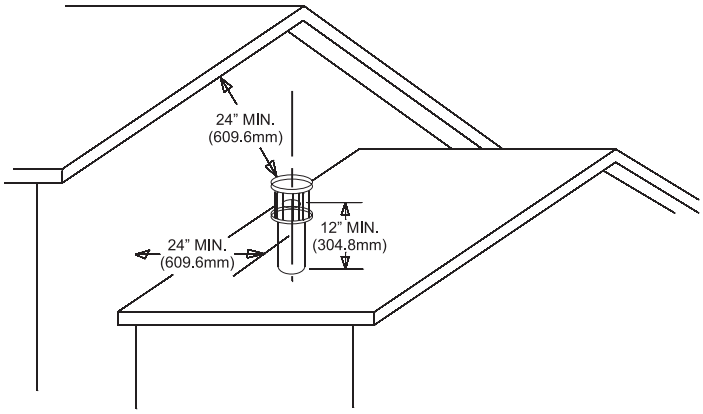

Figure 39

When terminating the vent cap near an exterior wall or overhang, maintain minimum clearances as shown in **Figure 39.**

General Maintenance

Conduct an inspection of the venting system semi-annually. Recommended areas to inspect are as follows:

1. Check areas of the venting system which are exposed to the elements for corrosion. These will appear as rust spots or streaks and, in extreme cases, holes. These components should immediately be replaced.
2. Remove the cap and shine a flashlight down the vent. Remove any bird nests or other foreign material.
3. Check for evidence of excessive condensate, such as water droplets forming in the inner liner and subsequently dripping out at joints. Condensate can cause corrosion of caps, pipe and fittings. It may be caused by having excessive lateral runs, too many elbows and exterior portions of the system being exposed to cold weather.
4. Inspect joints to verify that no pipe sections or fittings have been disturbed and, consequently, loosened. Also, check mechanical supports, such as wall straps or plumbers' tape for rigidity.

Venting terminal shall not be recessed into a wall or siding.

A removable panel or other means must be provided in the enclosure for visual inspection of the flue connection.

NOTE: This also pertains to vertical vent systems installed on the outside of the building.

Slide the vertical vent cap over the ends of the vent pipe and secure. **See Figure 40.**

Installing the Vent System in a Chase

A chase is a vertical box-like structure built to enclose the gas appliance and/or it's vent system. Vertical vent runs on the outside of a building may be, but are not required to be installed inside a chase.

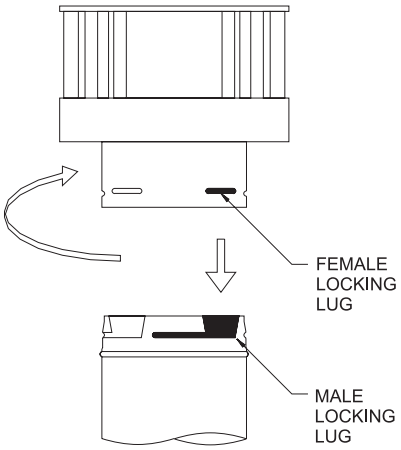

Figure 40

⚠ CAUTION

Treatment of firestop spacers and construction of the chase may vary with the type of building. These instructions are not substitutes for the requirements of local building codes. Therefore, your local building codes must be checked to determine the requirements for these steps.

NOTE: When installing this vent system in a chase, it is always good building practice to insulate the chase as you would the outside walls of your home. This is especially important for cold climate installations. Upon completion of building your chase framing, install the vent system by following the instructions in this manual. Remember to build the chase large enough so that minimum clearance of combustible materials (including insulation) to the vent system are maintained.

Reassembly and Resealing Vent Pipe System

Attach vent pipe to inlet and outlet vent adaptor on fireplace, replace horizontal and vertical pipe lengths, elbows and horizontal or vertical termination kit.

All vent system components lock into place by sliding the concentric pipe section with four equally spaced interior beads onto the appliance collar or previously installed component end with four equally spaced indented sections. When the internal beads of each starting outer pipe line up, rotate pipe section clockwise 90° (approximately three inches). The vent pipe is now locked together.

Continue replacing components per the vent system configuration. Be certain that each succeeding vent component is securely fitted and locked into the preceding component in the vent system.

Vertical Through the Roof Applications

Your Gas Fireplace has been approved for:

a) Vertical installations up to 40 feet in height.
b) Two sets of 45 degree elbow offsets within these vertical installations. From 0 to a maximum of 8 ft. a vent pipe can be used between elbows.
c) Wall straps must be used to support offset pipe every 4'.

This application will require that you first determine the roof pitch and use the appropriate venting components.

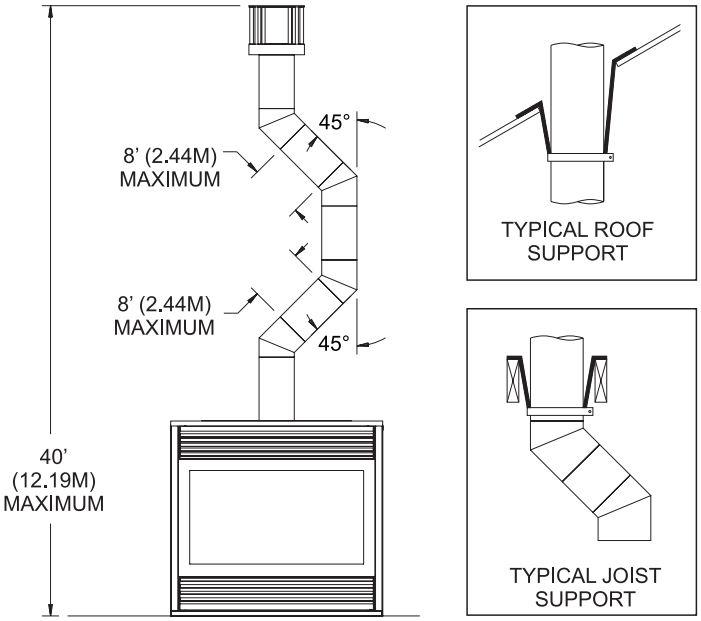

Figure 41

DVVK-4FV DIRECT VENT TERMINATION KIT

INSTALLATION INSTRUCTIONS

This termination kit can only be used with Empire Comfort Systems direct vent fireplaces listed for use with DVVK-4FV Vertical Flex Vent Kit. Please review the instructions packaged with your fireplace and verify the fireplace model number. Check that this flex vent system is listed for use with your fireplace model prior to starting the installation.

This vent kit may be installed as an OEM installation in a manufactured home (USA only) or mobile home and must be installed in accordance with the manufacturer's instructions and the manufactured home construction and safety standard, Title 24 CFR, Part 3280 or Standard for Installation in Mobile Homes, CAN/CSA Z240 MH.

⚠ CAUTION

All Fireplaces listed for use with the DVVK-4FV will operate safely when installed in accordance with this instruction manual. Read all instructions before starting installation, then follow these instructions carefully to maximize fireplace performance and safety. Report damaged parts to your dealer.

⚠ WARNING

Any common venting of the gas appliance using the DV vent kit with other gas appliances is not allowed. Do not connect this appliance to a chimney flue servicing a separate solid fuel-burning appliance.

⚠ WARNING

Failure to follow these instructions may create a possible fire hazard and will void the warranty.

⚠ WARNING

Always maintain minimum clearances around vent systems. The minimum clearance to combustibles for horizontal runs of vent pipe is 3 inches from the top, and 1 inch from the sides and bottom of the vent system. Do not pack the open air spaces around the fireplace or flue with insulation or other materials. Any horizontal run must have a 1/4" rise for every one foot of run towards the vent termination. The vent above the roof must terminate vertically.

⚠ WARNING

Contact your Local Building and Fire Officials about restrictions and installation inspections in your area.

IMPORTANT SAFETY INFORMATION

- The vertical termination cap MUST be vented directly to the outside. The termination kit MUST NEVER be connected to a chimney flue(s) servicing a separate solid-fuel burning appliance or any other appliances.
- Termination cap MUST NOT be mounted horizontally.
- The flexible vent pipe cannot be intermingled with any of the rigid vent pipe section(s). DO NOT connect two sections of flexible vent pipe together to achieve a longer length without the use of approved connectors.
- The installation must conform with local codes or in the absence of local codes, with the National Fuel Gas Code, ANSI Z223.1 (in the United States) or with the current installation code CAN/CGA B149 (in Canada).
- Only Direct Vent fireplaces approved for use with Empire Comfort Systems, Inc. DVVK-4FV termination kit shall be used. See PARTS LIST/ILLUSTRATIONS section for vent component identification.
- Horizontal vent runs must be supported every 2 feet using wall straps. Vertical runs must be supported every 3 feet using wall straps. Slip wall straps loosely on to pipe. Attach installer provided straps to framing members using nails or screws.
- The fireplace and venting system should be inspected before initial use and at least annually by a qualified field service person. Inspect the external vent cap on a regular basis to make sure that no debris is interfering with the airflow. Inspect entire venting system to ensure proper function.
- Please refer to the fireplace instructions for information on Termination Cap clearances.

PRE-INSTALLATION INFORMATION:

Items Required For Installation:

TOOLS	BUILDING SUPPLIES
• Phillips Screwdriver • Hammer • Saw And/Or Saber Saw • Level • Measuring Tape • Electric Drill And Bits • Pliers • Square • Tin Snips	• Framing Materials • Wall Finishing Materials • Caulking Material (Noncombustible) • Support Strap Supplies

Before You Start:
Plan your installation. Read these instructions and the fireplace installation manual before installing unit and vent system. Set unit in place and survey how best to vent the unit. After the vent configuration has been decided, stretch the flex pipe components out, then trim off what will not be needed.

Refer to the fireplace installation manual for information on vertical venting requirements. The maximum length of vent when using flex venting is 35 feet total. Contact your dealer or distributor for information on flex vent extension kits that may be added to the DVVK-4FV kit, in order to terminate up to 35 feet. Available extension kits include the DVEK-10 (10' Flex) or the DVEK-25 (25' Flex) extension kits. The extension kits include connection hardware.

Installation of the Vertical Flex Termination Kit

⚠ WARNING

Ensure that the venting system exits the structure through the roof and does not terminate less than 12 inches (305mm) above the roof.

⚠ WARNING

Refer to your fireplace homeowner's manual for the minimum and maximum venting requirement of your fireplace prior to installation. Failure to do so may cause a fire hazard.

⚠ WARNING

This flexible pipe termination kit is ONLY for vertical terminations.

⚠ WARNING

Any horizontal run section must have a 1/4" rise for every one foot of run towards the vent termination. Never allow the vent pipe to run downward. This could cause high temperatures and may present a fire hazard. This vertical kit may incorporate two 90 degree bends, but must terminate vertically.

⚠ CAUTION

This flex vent kit can only be installed vertically off of the unit and must terminate vertically.

⚠ WARNING

Because of sharp edges, always use gloves when handling the flex vent components.

⚠ CAUTION

Vent connections should overlap a minimum of one inch for proper sealing.

⚠ CAUTION

Always stretch and secure venting with metal strapping secured with nails (nails and strapping not supplied) to ensure that the flex vent runs remain true.

Step-By-Step Installation For Flex DV Kit

1. Unpack vent components and check all items for shipping damage.
2. For this venting system to operate as designed it is dependent on the use of all parts and procedures detailed in these instructions. Failure to follow these instructions may potentially affect the performance of this vent system and the attached appliance.
3. As per the fireplace manufacturer's instructions, replace the existing 6 5/8" diameter fireplace vent adapter with the 7" diameter flex vent fireplace adapter included in the vent kit. Install the adapter collar with the screws removed from the standard fireplace collar. Refer to the fireplace manual for additional information on the vent collar removal and installation.
4. Once the fireplace location has been determined, mark the ceiling where the flex vent will pass through. Cut an opening for installation of the firestop thimble assembly. The opening must measure a minimum of 9-1/2" x 9-1/2" square. **See Figure 42.**

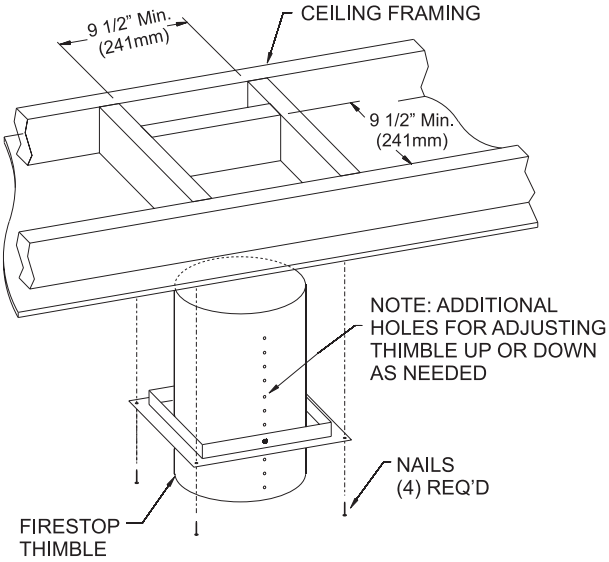

Figure 42

5. Next, determine the location for the cutout in the roof opening. This opening must be large enough to provide a minimum 1" air space clearance from the vertical vent pipe to any combustible framing.
6. Install the Firestop/Thimble assembly to the framed opening in the ceiling using common nails or screws.
   NOTICE: The thimble assembly is adjustable up or down as needed within the firestop. It is also designed with a pivoting firestop for use with 0 - 3/12 pitch cathedral ceilings.
7. To begin vent system assembly, first layout all the vent components on the floor in the order in which they will be assembled.
8. Stretch the 4" diameter inner flex flue and 7" diameter outer flex vent to the maximum length of 6 feet.
9. Install the spring spacers provided around the 4" diameter flex flue at 1 foot intervals, then slide the flue pipe with spacers into the 7" diameter outer flex vent pipe. Make sure the springs are spaced evenly starting at 12 inches from the fireplace collar. **See Figure 43.**

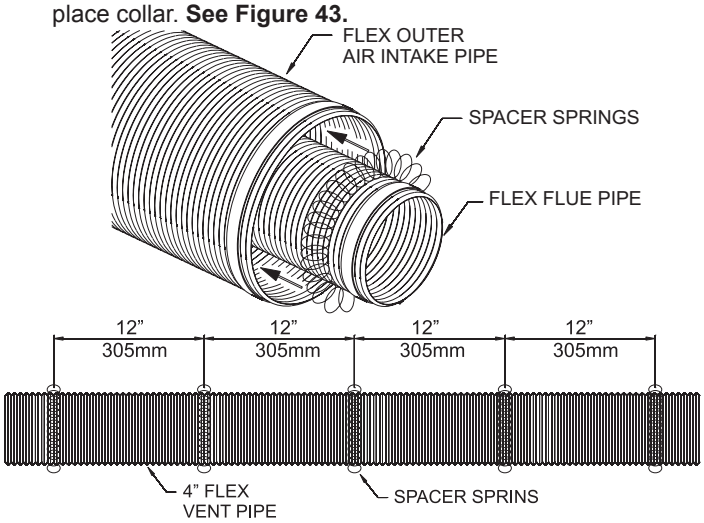

Figure 43

10. With the flex vent assembly and the 48” long hard pipe components laid out on the floor, begin securing these parts together. First, apply a generous bead of silicone sealant to the inside of the 4” diameter flex flue (not the end with the pre-installed connector), then slide the flex flue over the 4” diameter hard pipe flue. Be sure to overlap at least 1-1/4”. Secure this connection with a 4” diameter band clamp provided. Be careful not to damage or tear the flex flue when tightening clamp.
11. Repeat the connection process for the outer 7” diameter flex vent to hard pipe connection. Use silicone sealant at this joint also, overlap at least 1-1/4”, then secure the joint with the 7” diameter band clamp provided. Be careful not to damage or tear the flex vent pipe when tightening the clamp.
12. While the venting is still on the floor, assemble the roof jack components as shown in Figure 44 and pre-install the roof jack assembly to the hard pipe approximately 18” from the top end of the hard pipe.

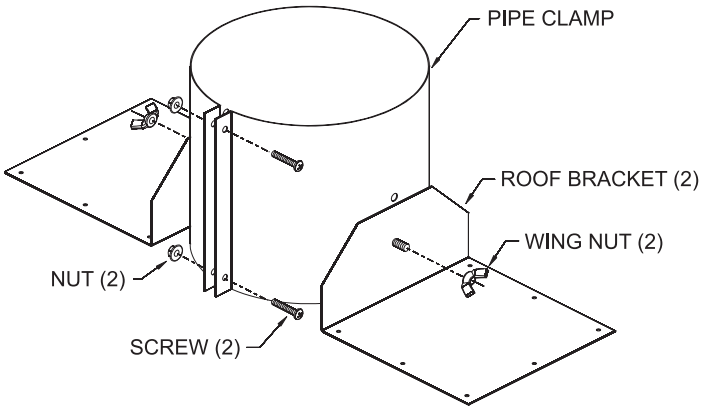

Figure 44

13. Now the pre-assembled vent system may be carried to the roof, then lowered through the roof cutout opening (see step 5). Feed the flex vent end down through the roof opening and firestop/thimble assembly installed in steps 4 through 6.
14. Secure the roof support assembly to the roof sheathing with at least four nails/screws through each support bracket. Check that the combustible clearances through the roof framing will maintain at least a 1” clearance from the vent pipe.
15. Determine how high the vent terminal should be located above the roof line based on the roof pitch information shown in Figure 46. Adjust the vent system height by loosening the pre-installed roof support pipe clamp and sliding the vent pipe up or down as pre-determined, then re-tighten the pipe clamp. Install a couple of sheet metal screws through the pipe clamp into the outer hard vent pipe to lock in place.
16. Check to make sure that the bottom end of the flex vent is long enough to reach the fireplace adapter collars. If too long, trim off the extra flex vent not needed.

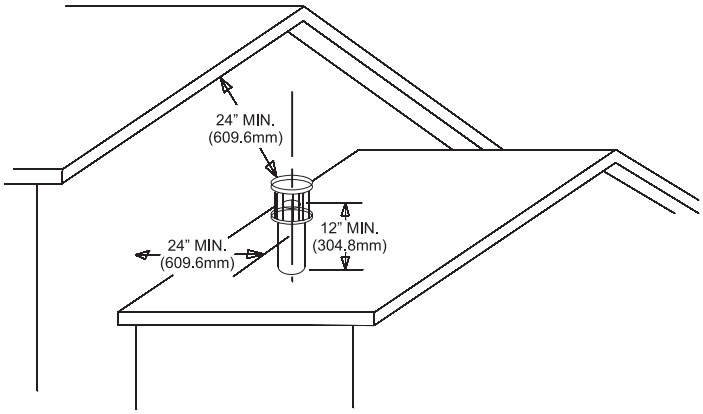

Figure 45

When terminating the vent cap near an exterior wall or overhang, maintain minimum clearances as shown in Figure 45.

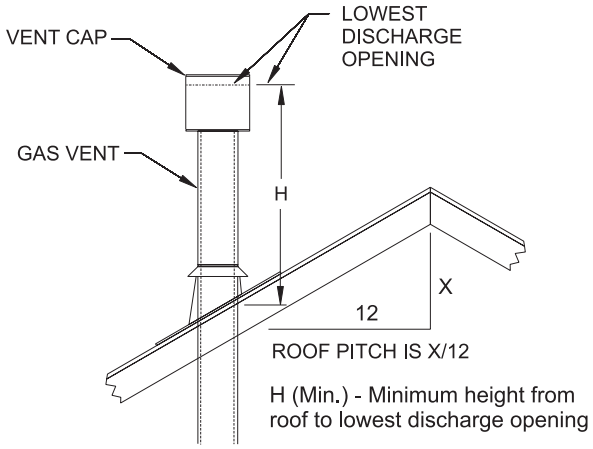

ROOF PITCH	H (Min.)
Flat to 6/12	12” (305mm)
6/12 to 7/12	15” (381mm)
Over 7/12 to 8/12	18” (457mm)
Over 8/12 to 16/12	24” (610mm)
Over 16/12 to 21/12	36” (914mm)

Figure 46

17. To attach the vent connections at the fireplace, be sure the 7” diameter adapter collar has been installed per step 3. Apply a bead of silicone sealant to the 4” diameter flex connector, then slide the flex pipe adapter collar into the fireplace flue collar and secure by installing a minimum of two screws through the flue collar and into the adapter. **See Figure 47.**
18. Apply sealant to the 7” diameter adapter collar, slide outer flex vent over the collar, then secure with a 7” diameter band clamp. **See Figure 47.**

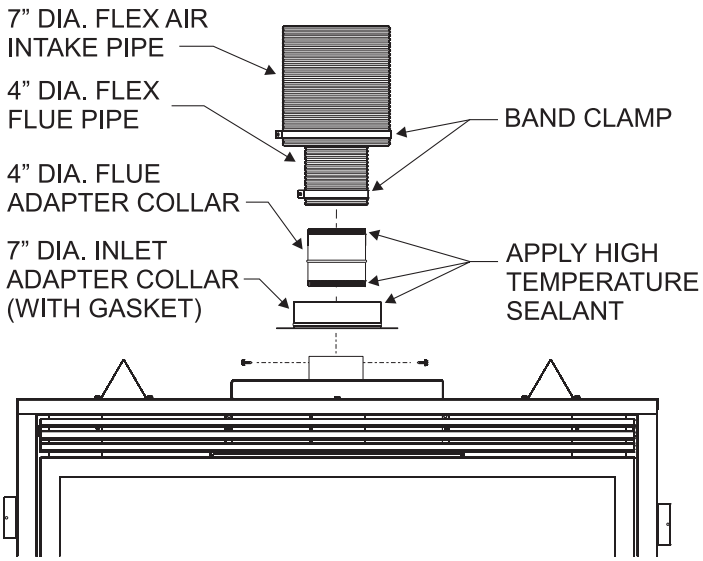

Figure 47

19. Once the lower connections are made and the flex pipe is secured with support bands as required (3 feet minimum between supports) then the roof flashing can be installed. **See Figure 48.**

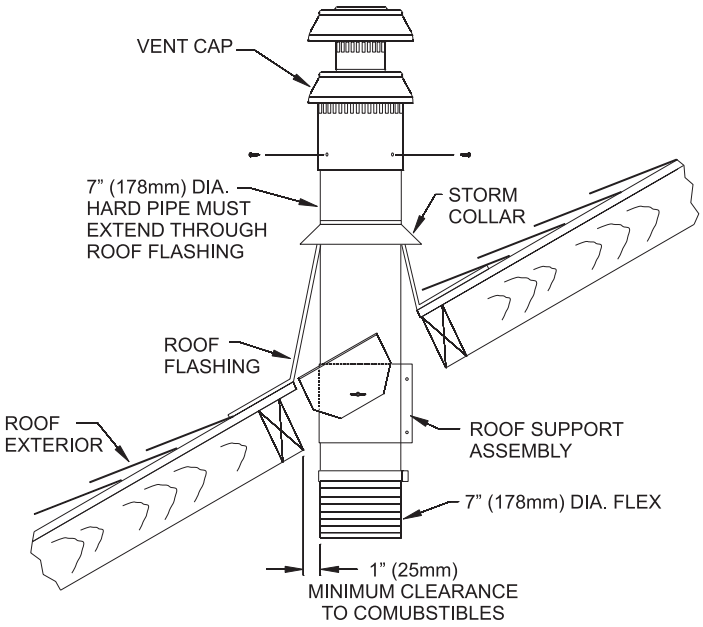

Figure 48

20. Install the roof flashing, and seal using common constructions practices.
21. An additional storm collar band is provided in kit that may be used as an attic insulation shield. The collar can be installed around the flex pipe (or hard pipe) just above the firestop thimble. This collar will act as a shield to prevent blown insulation from entering the thimble.
22. To complete the vent installation, install the vent termination cap to the top of the hard vent pipe assembly. Mate up the flue and outer telescopes with the hard pipe assembly, then secure by installing a minimum of two sheet metal screws into the overlapped flanges of the cap and pipe.
23. Figure 49 shows a completed installation with components identified and other installation information such as heights and clearance to combustibles.

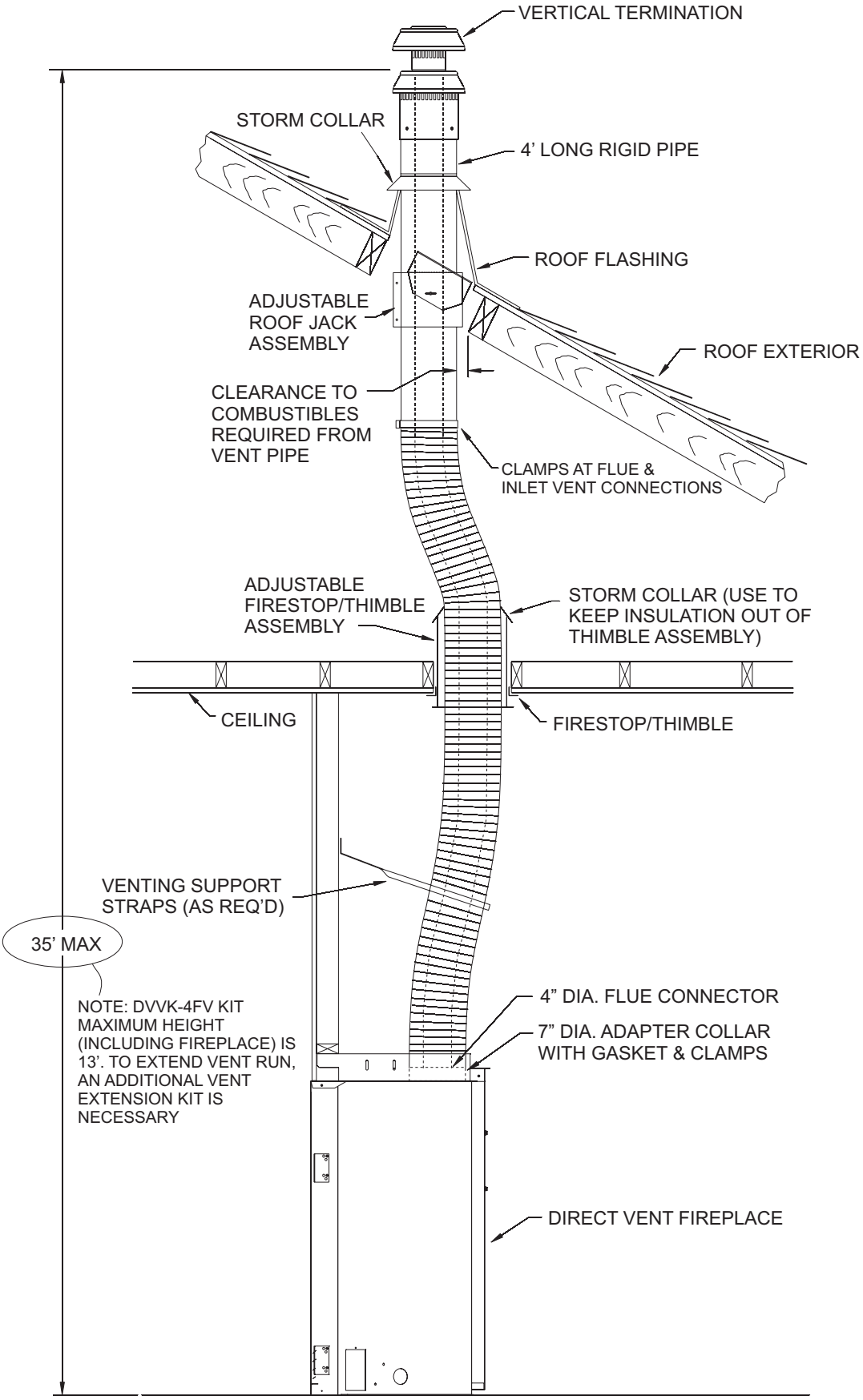
VERTICAL TERMINATION
STORM COLLAR
4' LONG RIGID PIPE
ROOF FLASHING
ADJUSTABLE ROOF JACK ASSEMBLY
ROOF EXTERIOR
CLEARANCE TO COMBUSTIBLES REQUIRED FROM VENT PIPE
CLAMPS AT FLUE & INLET VENT CONNECTIONS
ADJUSTABLE FIRESTOP/THIMBLE ASSEMBLY
STORM COLLAR (USE TO KEEP INSULATION OUT OF THIMBLE ASSEMBLY)
CEILING
FIRESTOP/THIMBLE
VENTING SUPPORT STRAPS (AS REQ'D)
35' MAX
NOTE: DVVK-4FV KIT MAXIMUM HEIGHT (INCLUDING FIREPLACE) IS 13'. TO EXTEND VENT RUN, AN ADDITIONAL VENT EXTENSION KIT IS NECESSARY
4" DIA. FLUE CONNECTOR
7" DIA. ADAPTER COLLAR WITH GASKET & CLAMPS
DIRECT VENT FIREPLACE

Figure 49

Vertical Flex Termination Kit

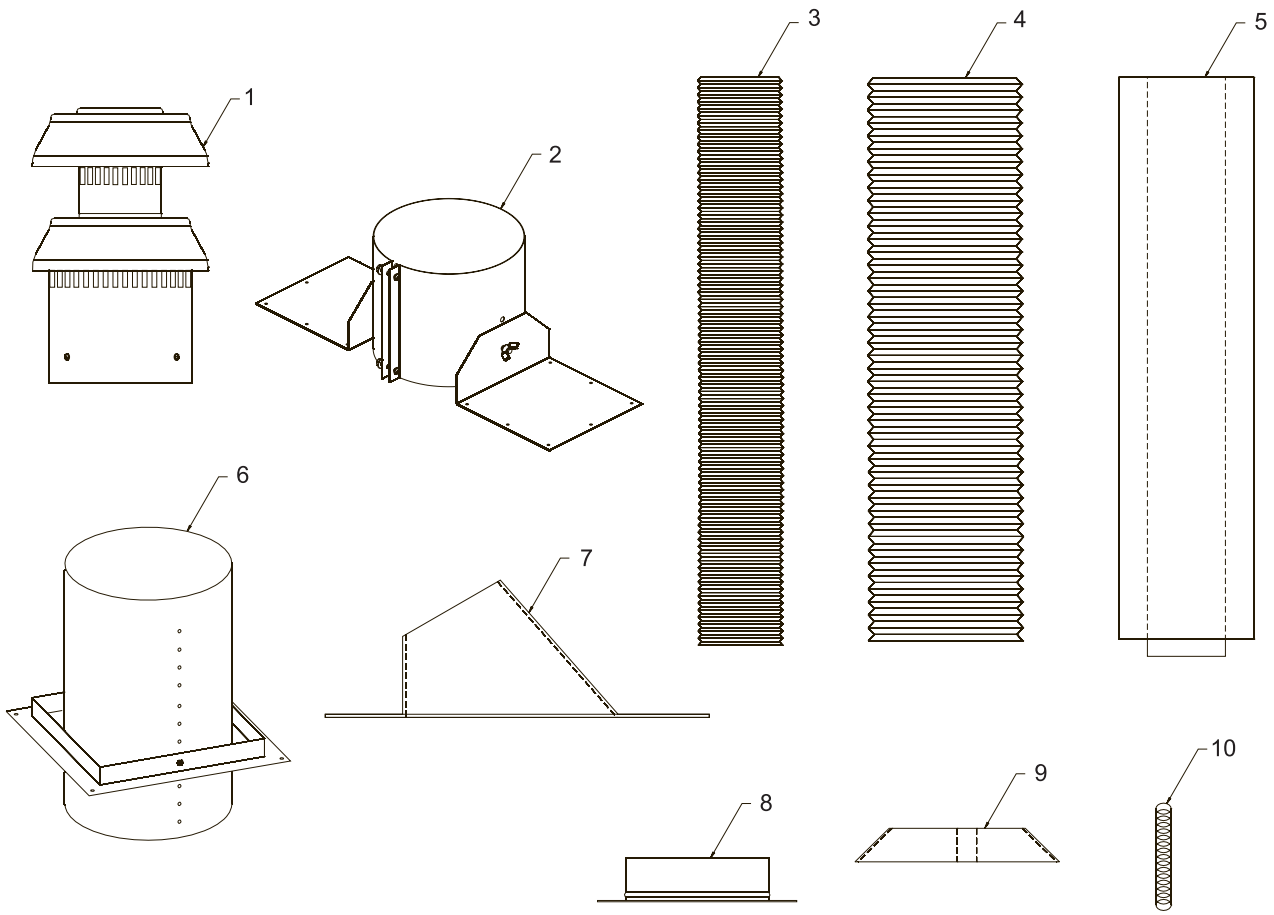

Item Number	Item Description	Repair Part No.	Quantity Supplied
1	4”/7” Vertical Termination Cap	MF100038	1
2	Roof Support Kit	MF100503	1
3	2 Ply Alum Flex 4” Diameter by 6 ft.	MF04ALA2F006	1
4	2 Ply Alum Flex 7” Diameter by 6 ft.	MF07ALA2F006	1
5	4”/7” x 48” Rigid Pipe Assembly	MF100554	1
6	Firestop Thimble Assembly	MF100124	1
7	Roof Flashing (0/12 to 6/12)	MF100091	1
8	7” Flex Adapter Collar with Gasket	MF100524	1
9	7” Storm Collar	MF100147	2
10	Spring Spacers	MF100548	5
N/S	Clamp 4” Diameter	MF100330	2
N/S	Clamp 7” Diameter	MF100534	2
N/S	#8 x 1/2” Self Drilling Screws	N/A	20
N/S	HT Silicone	N/A	1
N/S	#8 x 5/8” Self Drilling Screws	N/A	10

DVVK-4F FLEX VENT INSTRUCTIONS (DVX36 ONLY)

The DVVK-4F FLEX VENT KIT includes the following components:

- Horizontal Termination Cap
- 4-foot section of Flex vent with spacers (4" flue/7" outer pipe)
- 4" diameter flue adapter collar
- 7" diameter outer vent adapter collar
- Wall Firestop/Thimble Assembly
- Hardware pack that includes band clamps and screws

Flex venting can only be installed vertically off of the DVX Series fireplaces. When installing a horizontal vent run from top connections, maintain at least ½" rise for every 12" of vent run. Refer to Figure 37 when mounting termination near vinyl siding.

⚠ CAUTION

- **Always stretch and secure venting with wire or metal strapping to ensure that the horizontal runs do not sag.**
- **If space permits, it is generally easier to attach venting in the top vent configuration.**
- **Because of sharp edges, always use gloves when handling the flex vent components.**
- **Vent connections should overlap a minimum of 1" for proper sealing.**
- **Always follow the general venting requirements for vent terminal location, vent lengths, and clearance to combustible materials.**

INSTALLATION

1. Unpack vent components and check that all items are included.
2. Check to see that the vent spacer springs are located around the flue vent at 8" and 12" intervals along its length. **See Figure 50.** If not, stretch the spacer springs to about 15" long and wrap them around the flue, then interlock the ends of each spring about 2". **See Figure 51.** Maintain equal distance between spring spacers.

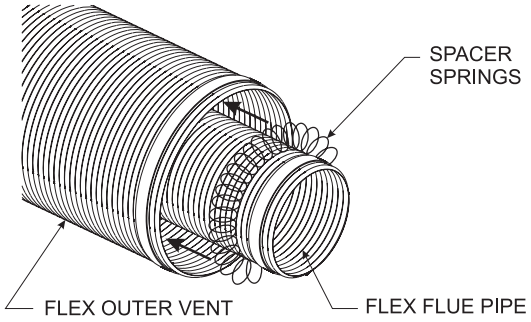

Figure 50

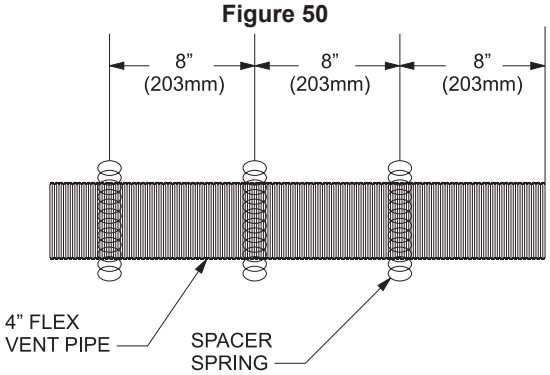

Figure 51

3. Remove the 6-5/8" diameter vent collar from the fireplace. Replace this collar with the 7" diameter Flex Vent adapter collar provided with the vent kit.
4. Slide the Flex Vent flue pipe into the Outer Flex Vent pipe.
5. Install the Wall Firestop/Thimble assembly as required through the wall. Refer to the venting charts in the fireplace manual to determine the proper height and size of the vent opening. The minimum opening should be 9" wide by 11" high. The minimum combustible clearance from the horizontal vent is 1" from sides and bottom, and 3" above the vent pipe. **See Figure 53.**
6. In most cases, after determining the length of the vent that is needed, it may be easier to install the flue and outer vent pipes to the Termination Cap first, then from the outside, feed the venting through the wall to the fireplace.
7. If the venting is too long, trim off any excess vent before attaching the vent end connectors.
8. Attach the Termination Cap to the outside of the house.
9. Prior to making the vent connections, apply high temperature sealant (1000 degree F min.) to the vent connections before securing with the band clamps provided.
   NOTICE: The flue pipe end **without the adapter** is to be installed to the Termination Cap.
10. Apply sealant to the outside of the flue pipe adapter and connect to the flex flue pipe. Then insert the adapter into the fireplace flue. Secure flue adapter to the fireplace flue with a minimum of two screws provided. **See Figure 52.**
11. Attach the Outer Vent pipe to the 7" diameter collar on the fireplace with a large band clamp provided. Sealant may also be used on the outer vent connections.
12. Check all vent connections for tightness. Make sure horizontal venting has the proper rise and combustible clearances required. Refer to venting charts in fireplace instruction manual.

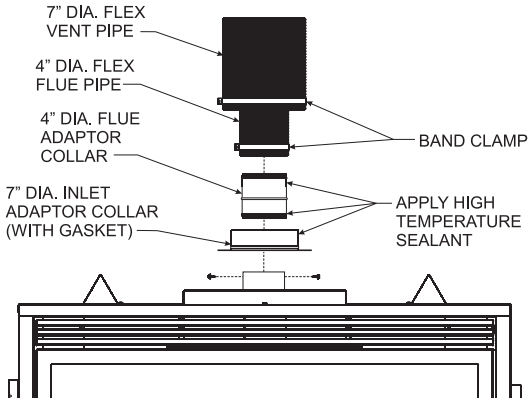

Figure 52

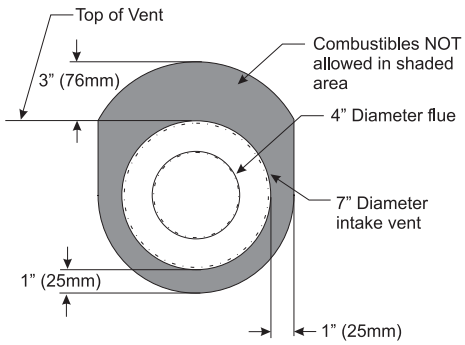

Figure 53

DVVK-4RE VENT KIT INSTALLATION INSTRUCTIONS

⚠ CAUTION

Sharp edges, use protective gloves when installing.

Tools Needed for Installation:

- Sheet metal snips
- 5/16” nut driver
- Phillips head screwdriver - #2
- High temperature sealant or furnace cement rated for continuous use at 1,000°F minimum
- Measuring tape

See parts list on page 38 to verify components included in this vent kit prior to installation.

NOTICE: If installing onto wood, lap, or vinyl siding, the vinyl siding kit should be used (sold separately, part number DV-822).
The vinyl siding vent kit, DV-822, is available from Empire Comfort Systems, Inc. The depth is 3” (76mm), which enables the vent cap to be extended away from vinyl siding or projections. The wall depth plus the additional 3” (76mm) depth of the vinyl siding vent cap extension should not exceed a total depth of 13 3/4” (349mm). If wall depth exceeds 13 3/4” (349mm), extend system using 6 5/8” (168mm) x 4” (102mm) rigid venting (See Fireplace Instructions for approved lengths) **See Figure 55.**

Installing Wall Thimble/Firestop Assembly

1. Fix fireplace to permanent location. If using rigid venting system, install up to the location where it will exit the building.
2. Cut hole in wall for wall thimble/firestop assembly into your combustible wall. **See Figure 54.** Note: On brick or block exterior wall a 7” (178mm) diameter hole needs to be cut.
   Measure the total wall thickness to determine whether or not the extension thimble is to be used. If the combustible wall depth is over 5 3/8” (137mm), then the extension thimble should be used. **See Figure 54**.
3. Install the wall thimble assembly through the framed opening so the firestop plate is on the interior wall. **See Figure 54.** Telescope section should extend all the way through the exterior wall. Attach with four 10 x 1” screws.
4. When placing the vent cap on an exterior wall covered with combustibles such as wood, lap, or vinyl siding, install the vinyl siding kit to the exterior wall sheathing.

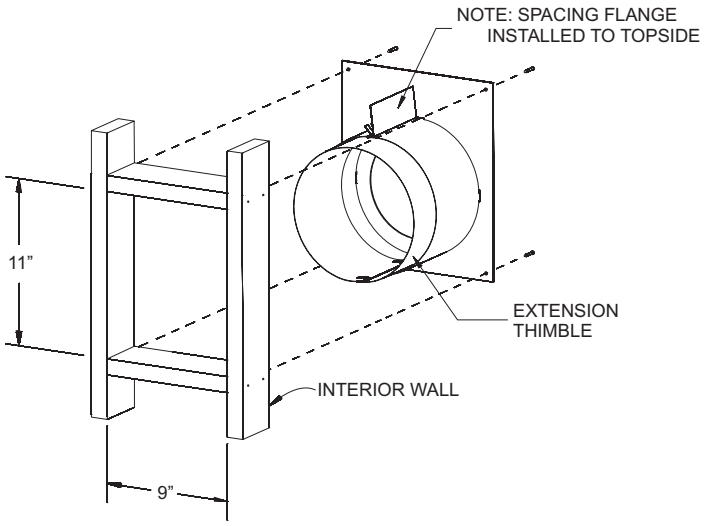

Figure 54

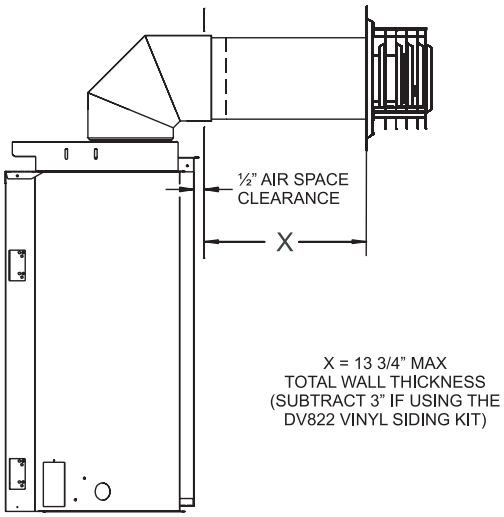

Figure 55

CUTTING VENT TUBES

This is the most important part of the installation. With the fireplace (and the rigid venting system if used) fixed to its permanent location, the 6 5/8” (168mm) diameter air inlet tube and the 4” (102mm) diameter flue outlet tube are to be marked and cut using the following procedure.

5. Attach the inlet tube to the outside mounting plate. Align tinnerman clips on the tabs of the air inlet tube to the holes on outside mounting plate, and fix with two #10 x 1/2” screws.
6. With the vinyl siding kit installed to wall (if necessary), insert the 6 5/8” (168mm) diameter tube with outside mounting plate attached through hole in wall. Connect to collar on fireplace or rigid vent system. Measure between wall or vent cap extension and outside mounting plate. **See Figures 54 and 55**.

7. Remove outside mounting plate with tube attached from wall. Mark and cut the extra length of the 6 5/8" (168mm) diameter tube from the opposite end. Do not crimp or enlarge tube.
8. Attach the 4" (102mm) diameter flue outlet tube onto the rigid venting system or directly to fireplace. Ensure the 4" (102mm) diameter flue outlet tube is placed as far as possible onto the rigid venting system. Mark the 4" (102mm) diameter flue outlet tube 2 1/2" (64mm) beyond the vinyl siding kit or wall. S**ee Figure 56.** Remove the 4" (102mm) diameter flue outlet tube from rigid venting system. When installing directly to fireplace, tape gasket needs to be used.

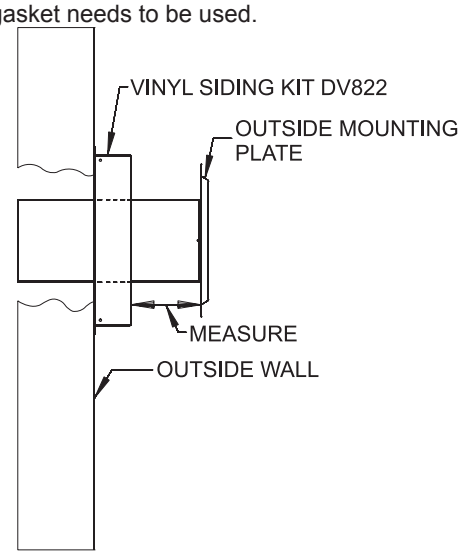

Figure 56

9. Mark or wrap tape completely around the tubes at the marked points to help in making a true cut. Do not crimp or enlarge tubes.
10. From outside: Push the 6 5/8" (168mm) diameter inlet tube/ mounting plate onto end of rigid venting system to correct position. Fasten the outside mounting plate to the vinyl siding kit or wall with 10 x 1 1/2" screws. (Ensure upward slope).
11. From inside: Attach the inlet tube to the collar on the back of the fireplace (or the rigid venting system) using three self tapping screws.

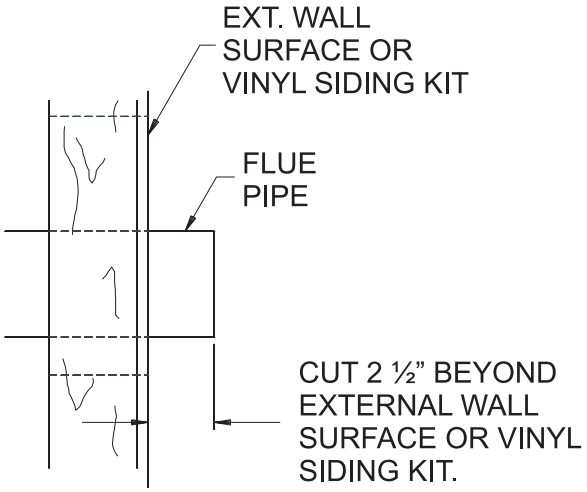

Figure 57

12. Seal the 4" (102mm) diameter flue outlet tube. Follow instructions and diagram. **See Figure 58**.
13. Fasten 4" (102mm) diameter flue outlet tube in place. Do not "twist" the flue outlet tube into the fireplace collar (or rigid venting system). Hold the tube by the seam and push in using a perpendicular "rocking" motion. This ensures the seam on the tube stay intact.
14. Fasten vent cap end using three 10 x 1/2" screws to mounting plate.

Sealing 4" (102mm) Diameter Flue Outlet Tube

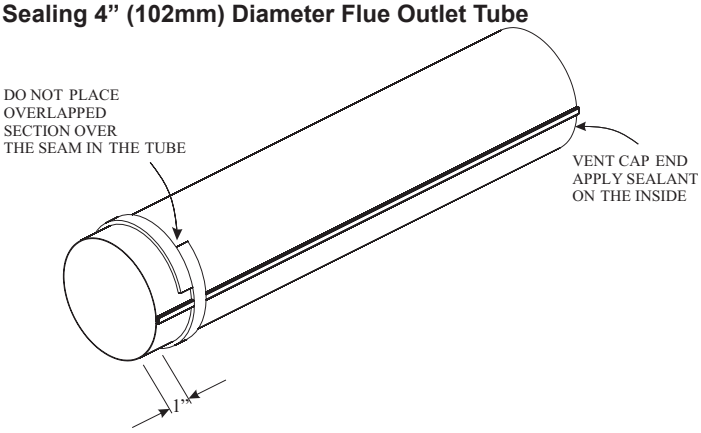

Figure 58

NOTE: Tape gasket to be applied prior to installing to fireplace flue outlet tube only. Tape gasket should not be used when mating the flue outlet tube to a rigid venting system.

FOLLOW CORRECT OPTION ACCORDING TO VENTING METHOD.

Connecting Directly to Fireplace

If the air inlet and flue outlet tubes are to be connected directly to the unit (no rigid venting system is being used), then the gasket provided must be used to seal the 4” (102mm) flue outlet tube. Peel the paper off the self-adhesive gasket and then wrap it around the end of the tube (if tube was cut, it is recommended to use cut end) as shown in **Figure 58.** Pull the gasket tight at all times while wrapping it around tube. The gasket ends should align, to form a complete seal. The overlapped section should NOT come in contact with the seam in the tube. Apply high temperature sealant to the opposite end of the tube (on the inside of the tube). The end with the gasket will attach to the back of the unit. Continue with Step 13.

PARTS LIST

INDEX NUMBER	PART NUMBER	DESCRIPTION
1	DV769	Vent Cap Assembly
2	19193	Outside Mounting Plate
3	19194	Air Inlet Tube
4	DV524	Flue Outlet Tube
5	19196	Firestop/Thimble Assembly
6	20527	Gasket

Connecting to Rigid Vent System

If the air inlet and flue outlet tubes are to be connected to a rigid venting system (and not directly to the back of the unit), then **do not** use the gasket provided. High temperature sealant should be applied to the outside of the 4” diameter (102mm) flue outlet tube (if tube was cut, it is recommended to use cut end) and to the inside of the tube on the end that connects to the vent cap. Continue with step 13.

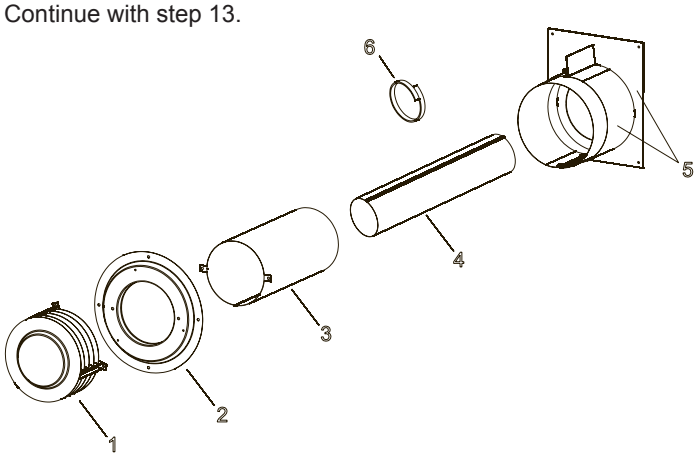

DVVK-5F FLEX VENT INSTRUCTIONS (DVX42 ONLY)

The **DVVK-5F FLEX VENT KIT** includes the following components:

- Horizontal Termination Cap
- 4-foot section of Flex vent with spacers (5" flue/8" outer pipe) with flue adapter collar
- Wall Firestop/Thimble Assembly
- Hardware pack that includes band clamps and screws

Flex venting can only be installed vertically off of the DVX Series fireplaces. When installing a horizontal vent run from top connections, maintain at least ½" rise for every 12" of vent run. Refer to the Figure 37 when mounting termination near vinyl siding.

⚠ CAUTION

- **Always stretch and secure venting with wire or metal strapping to ensure that the horizontal runs do not sag.**
- **If space permits, it is generally easier to attach venting in the top vent configuration.**
- **Because of sharp edges, always use gloves when handling the flex vent components.**
- **Vent connections should overlap a minimum of 1" for proper sealing.**
- **Always follow the general venting requirements for vent terminal location, vent lengths, and clearance to combustible materials.**

INSTALLATION

1. Unpack vent components and check that all items are included.
2. Check to see that the vent spacer springs are located around the flue vent at 8" and 12" intervals along its length. **See Figure 59.** If not, stretch the spacer springs to about 15" long and wrap them around the flue, then interlock the ends of each spring about 2". **See Figure 60.** Maintain equal distance between spring spacers.

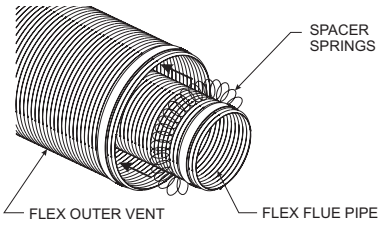

Figure 59

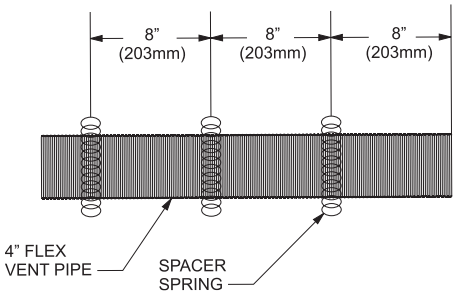

Figure 60

3. Use existing 8" diameter inlet collar to attach outer vent pipe.
4. Install the Wall Firestop/Thimble assembly as required through the wall. Refer to the venting charts in the fireplace manual to determine the proper height and size of the vent opening. The minimum opening should be 10" wide by 12" high. The minimum combustible clearance from the horizontal vent is 1" from sides and bottom, and 3" above the vent pipe. **See Figure 62.**
5. In most cases, after determining the length of the vent that is needed, it may be easier to install the flue and outer vent pipes to the Termination Cap first, then from the outside, feed the venting through the wall to the fireplace.
6. If the venting is to long, trim off any excess vent before attaching the vent end connectors.
7. Attach the Termination Cap to the outside of the house.

⚠ CAUTION

Do not use force when installing the Horizontal Vent Termination into the flex venting. Always stretch venting out first, then cut off excessive vent material prior to sliding the vent termination into the flue and inlet venting. Forcing the termination cap into the flex venting will deform the flue venting, which will restrict the exhaust gases, and cause improper operation of the fireplace.

8. Prior to making the vent connections, apply high temperature sealant (1000 degree F min.) to the vent connections before securing with the band clamps provided. Note: the flue pipe end without the adapter is to be installed to the Termination Cap.
9. Apply sealant to the outside of the flue pipe adapter and connect to the flex flue pipe. Then insert the adapter into the fireplace flue. Secure flue adapter to the fireplace flue with a minimum of two screws provided. **See Figure 61.**
10. Attach the Outer Vent pipe to the 8" diameter collar on the fireplace with a large band clamp provided. Sealant may also be used on the outer vent connections.
11. Check all vent connections for tightness. Make sure horizontal venting has the proper rise and combustible clearances required. Refer to venting charts in fireplace instruction manual.

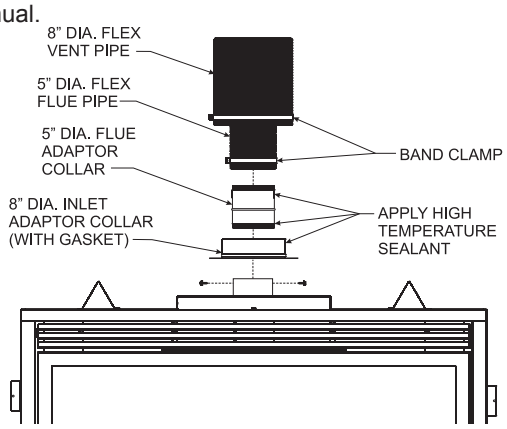

Figure 61

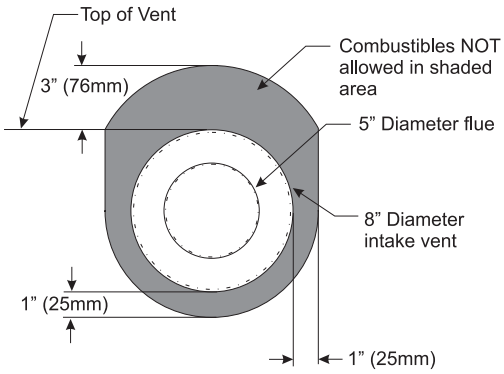

Figure 62

PROPANE GAS CONVERSION SETTINGS

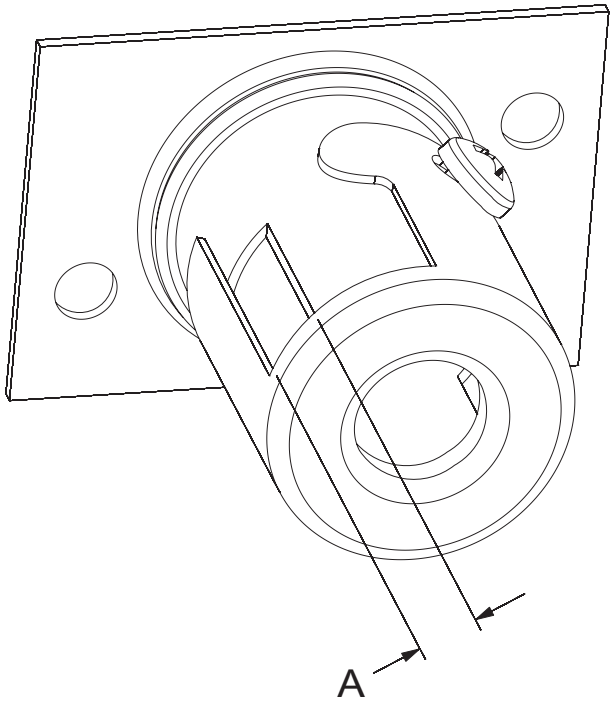

MODEL	AIR SHUTTER SETTINGS	BURNER ORIFICE
	OPENING "A"	PROPANE ORIFICE
DVX36	FULL OPEN	1.65 MM
DVX42	FULL OPEN	1.80 MM

Figure 63

DVX(36,42)FP LOG IDENTIFICATION

LOG DESCRIPTION	PART NUMBER	FRONT VIEW	TOP VIEW
Log A	R9228		
Log B	R9222		
Log C	R9227		
Log D	R9372		
Log E	R9225		
Log F	R9229		

DVX(36,42)FP LOG IDENTIFICATION (CONT'D)

LOG DESCRIPTION	PART NUMBER	FRONT VIEW	TOP VIEW
Log G	R9223		
Log H	R9373		
Log I	R9230		
Log J	R9231		
Log K	R9232		
Log L	R9224		
Log M	R9226		

LOG PLACEMENT

Before you begin: If you are installing logs into the DVX36 or DVX42 model then this fireplace is supplied with a set of 13 ceramic fiber logs. Do not handle these logs with your bare hands. Always wear gloves to prevent skin irritation from ceramic fibers. After handling logs, wash your hands gently with soap and water to remove any traces of fiber.

The positioning of logs is critical to safe and clean operation of this fireplace. Sooting and other problems may result if the logs are not properly and firmly positioned in the fireplace. Please refer to **Figures 65 through 67** and corresponding **WARNING**, when completing the following log placement steps.

1. Remove top and bottom louvers.
2. Remove glass door from firebox.
3. Remove logs from bun.
4. Place **Log A** onto the rear part of the burner over the pilot.

Top View

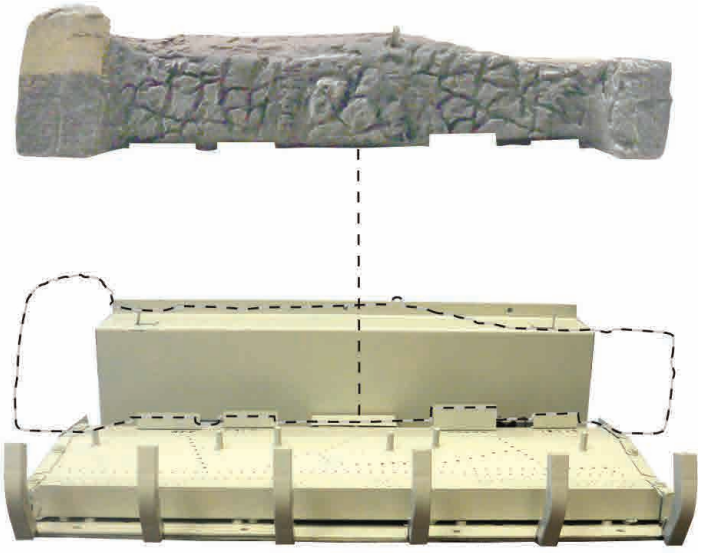

Front View

LOG PLACEMENT

5. Place **Log B** onto log shelf on the burner, ensuring pins go into holes on bottom of log. See image below

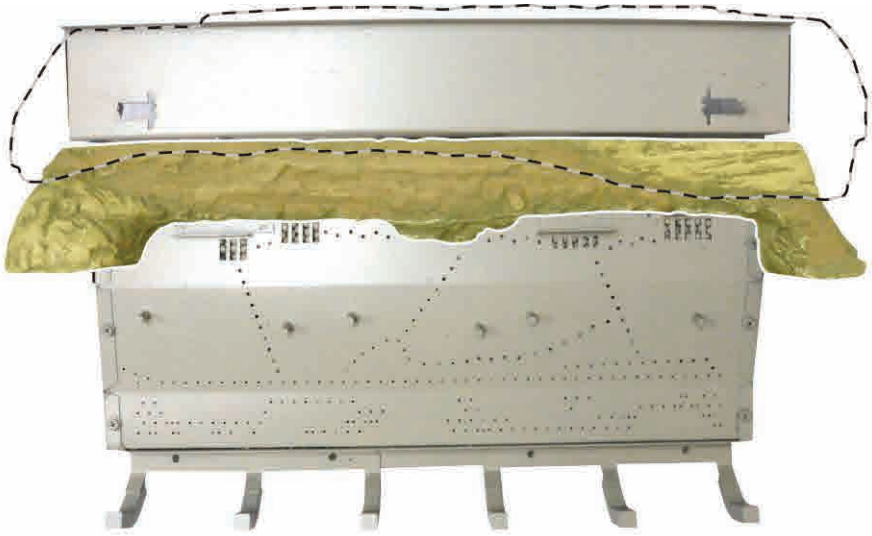

Top View

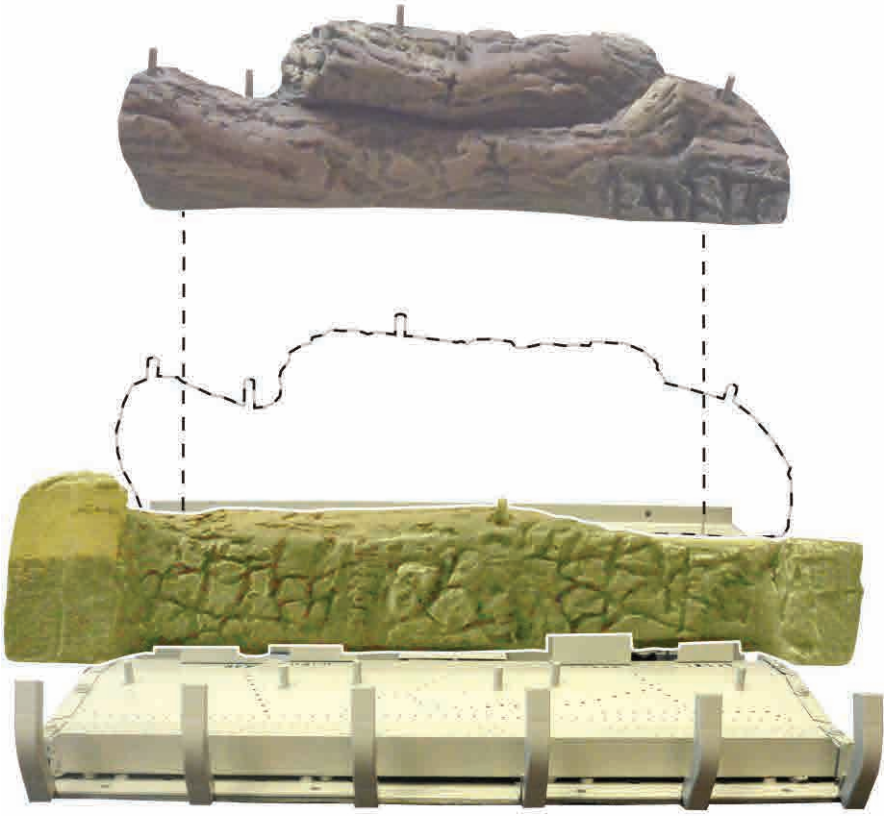

Front View

LOG PLACEMENT

6. Place **Log C** on far left burner pin. The "lip" of the log will hang off the side of the burner. See image below.

Top View

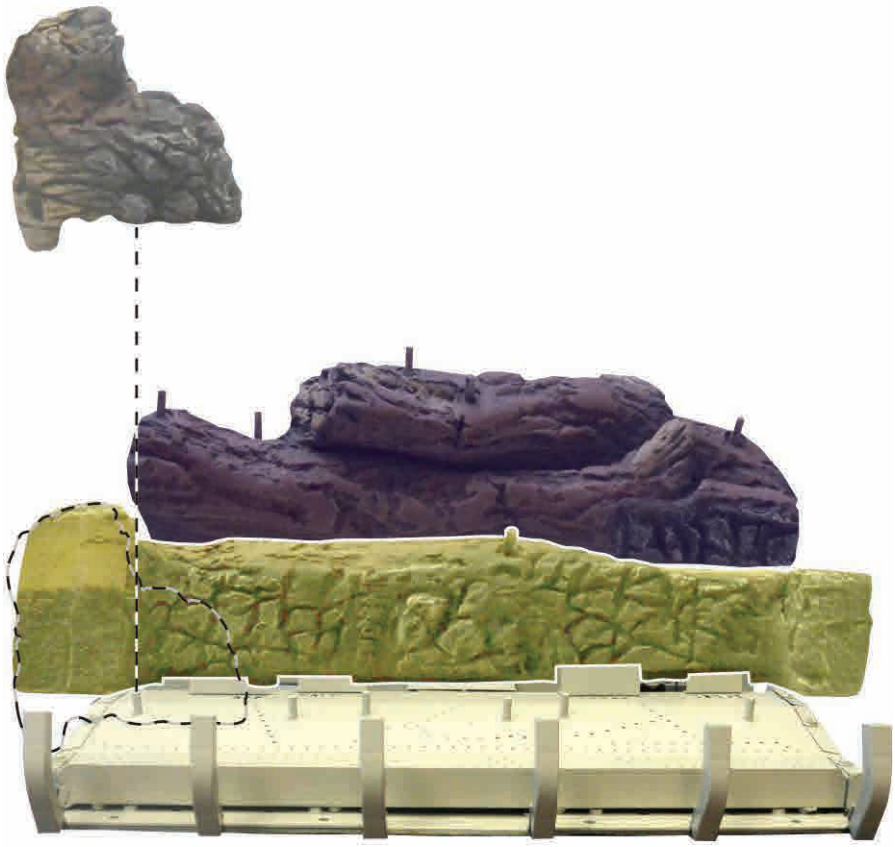

Front View

LOG PLACEMENT

7. Place **Log D** on second and third pins from left side of the burner as shown below.

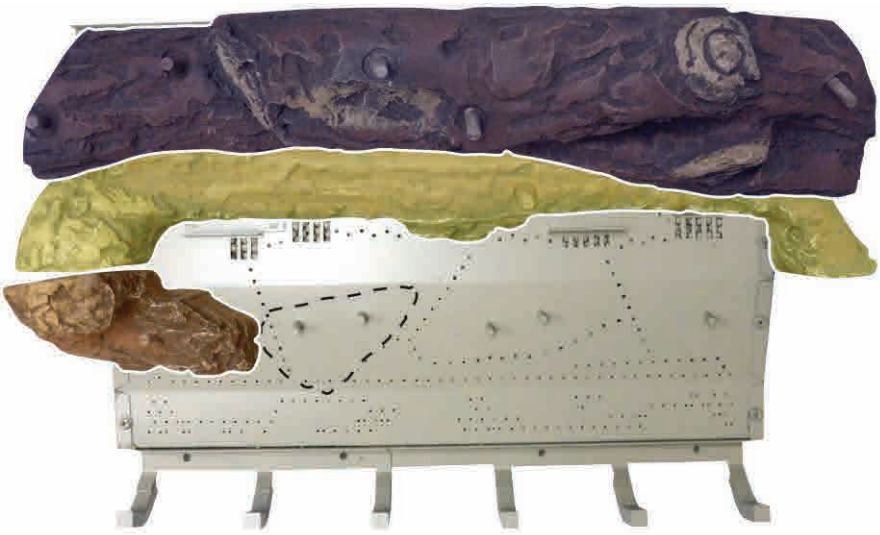

Top View

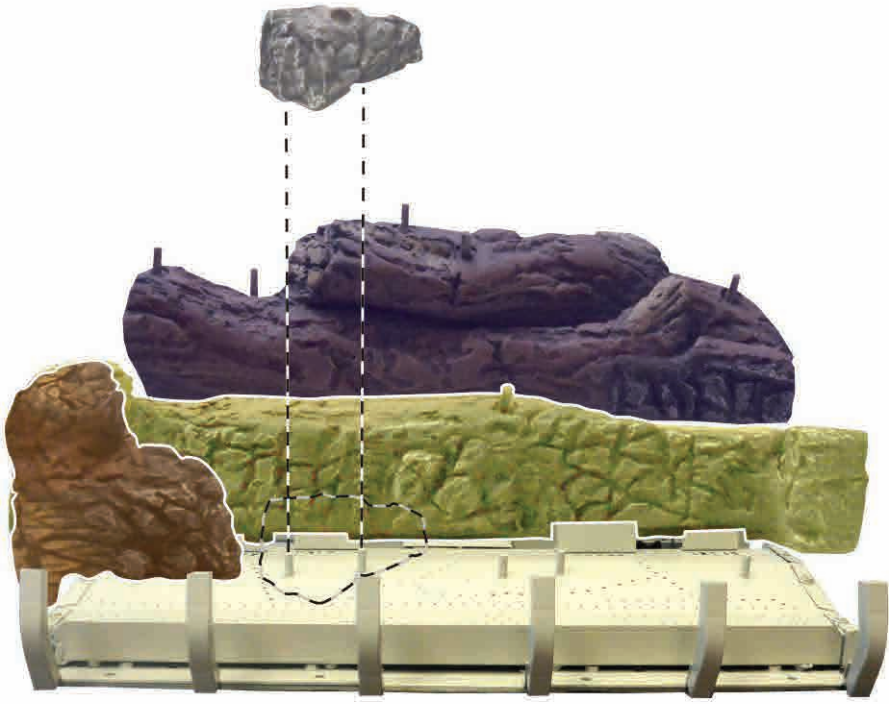

Front View

LOG PLACEMENT

8. Place **Log E** on fourth and fifth pins from the left side of the burner as shown below.

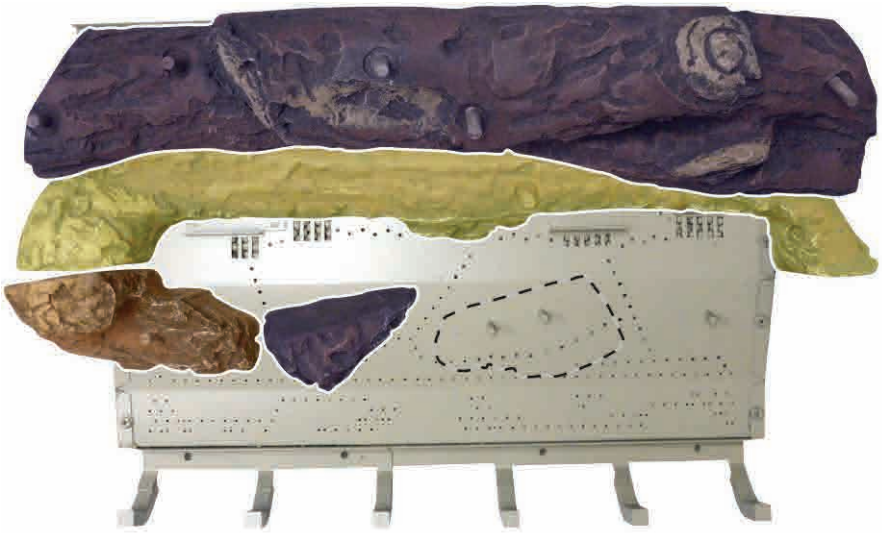

Top View

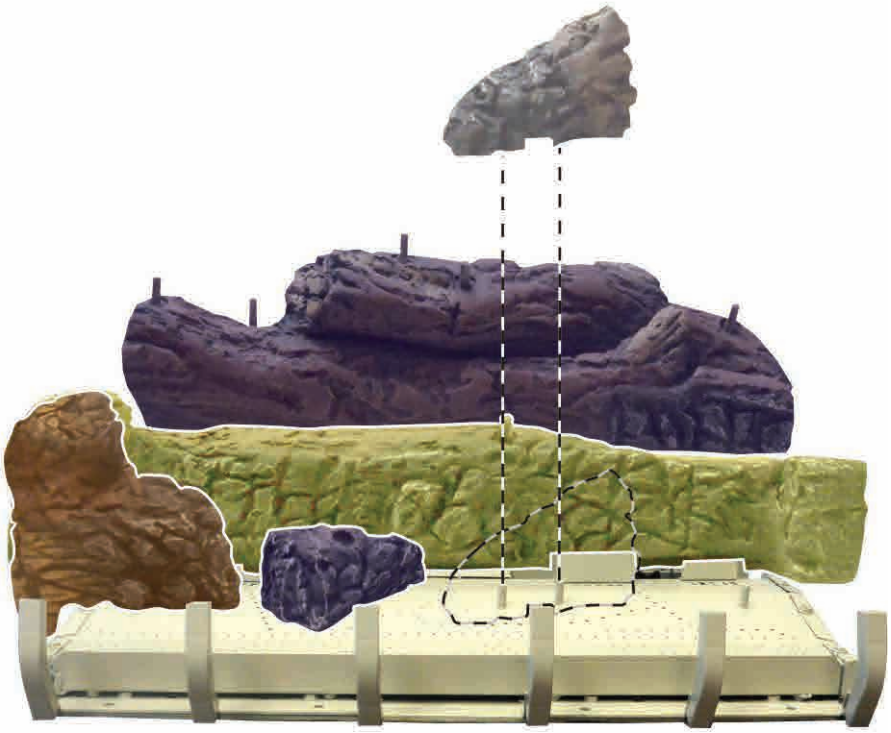

Front View

LOG PLACEMENT

9. Place **Log F** on far right burner pin. The "lip" of the log will hang off the side of the burner as shown below.

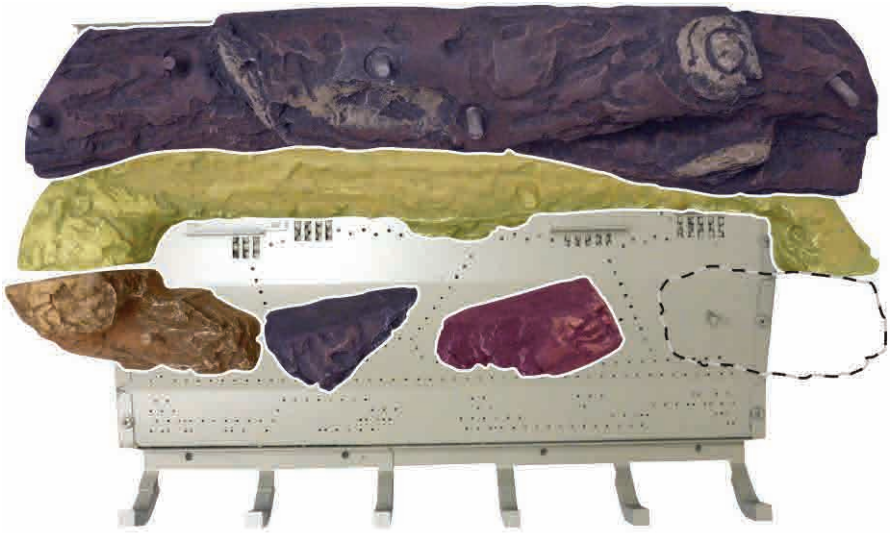

Top View

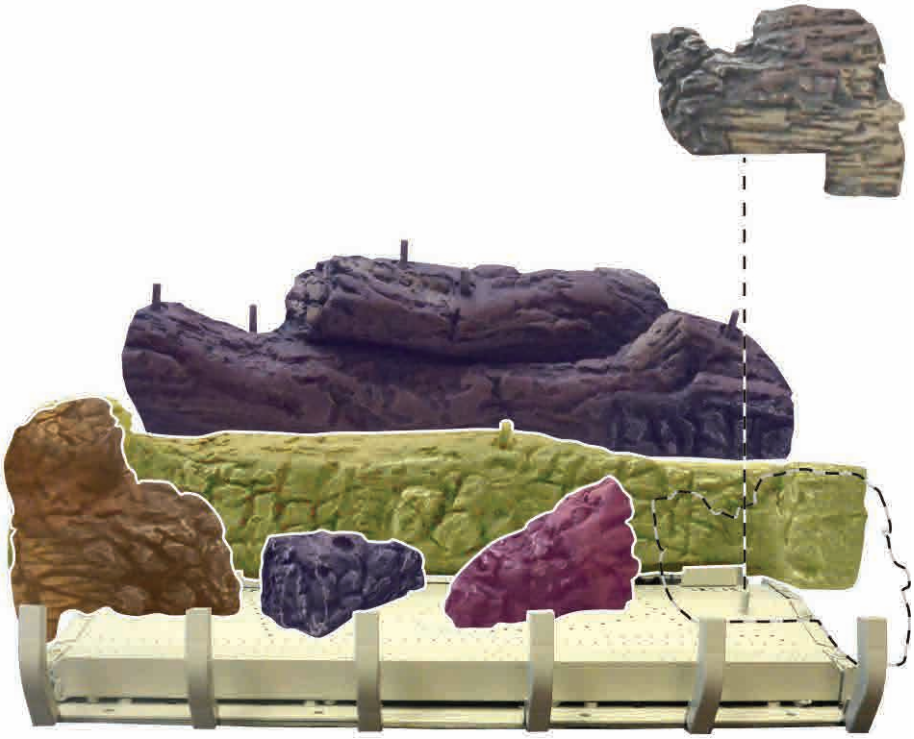

Front View

LOG PLACEMENT

10. Place **Log G** onto **Log C** pin. The end of **Log G** will rest on firebox bottom as shown below.

Top View

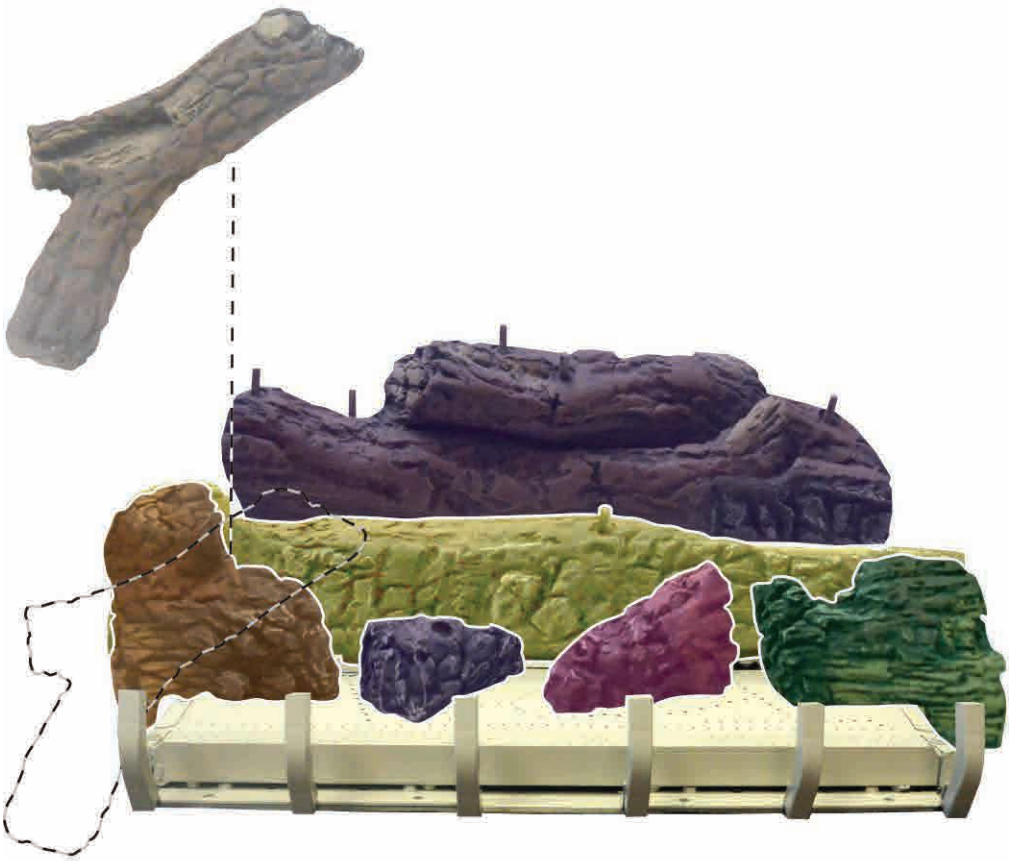

Front View

LOG PLACEMENT

11. Place **Log H** onto **Log A** pin with "Y" branches resting on **Logs D and E.** See image below.

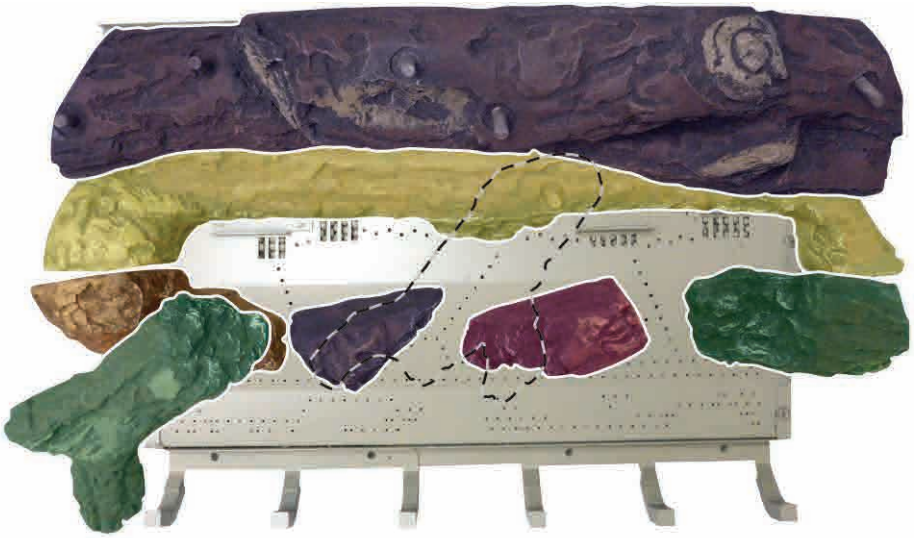

Top View

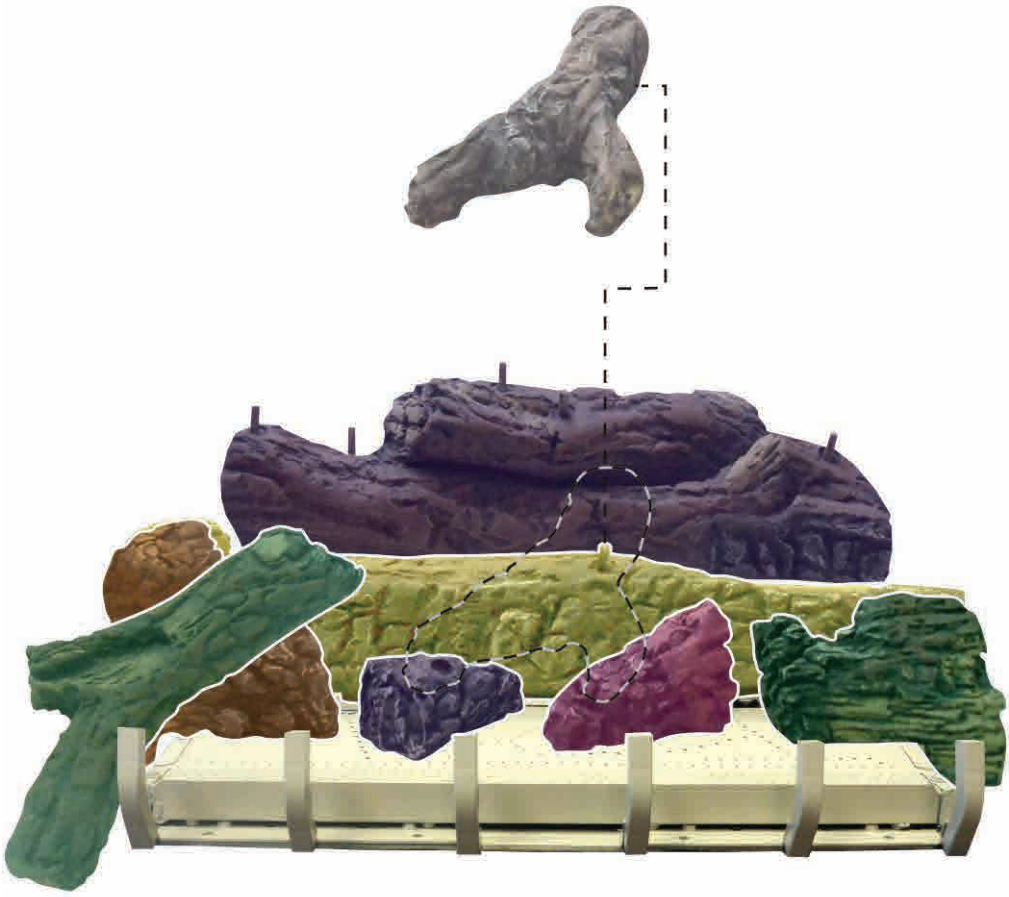

Front View

LOG PLACEMENT

12. Place **Log I** on the two left pins of **Log B** as shown below.

Top View

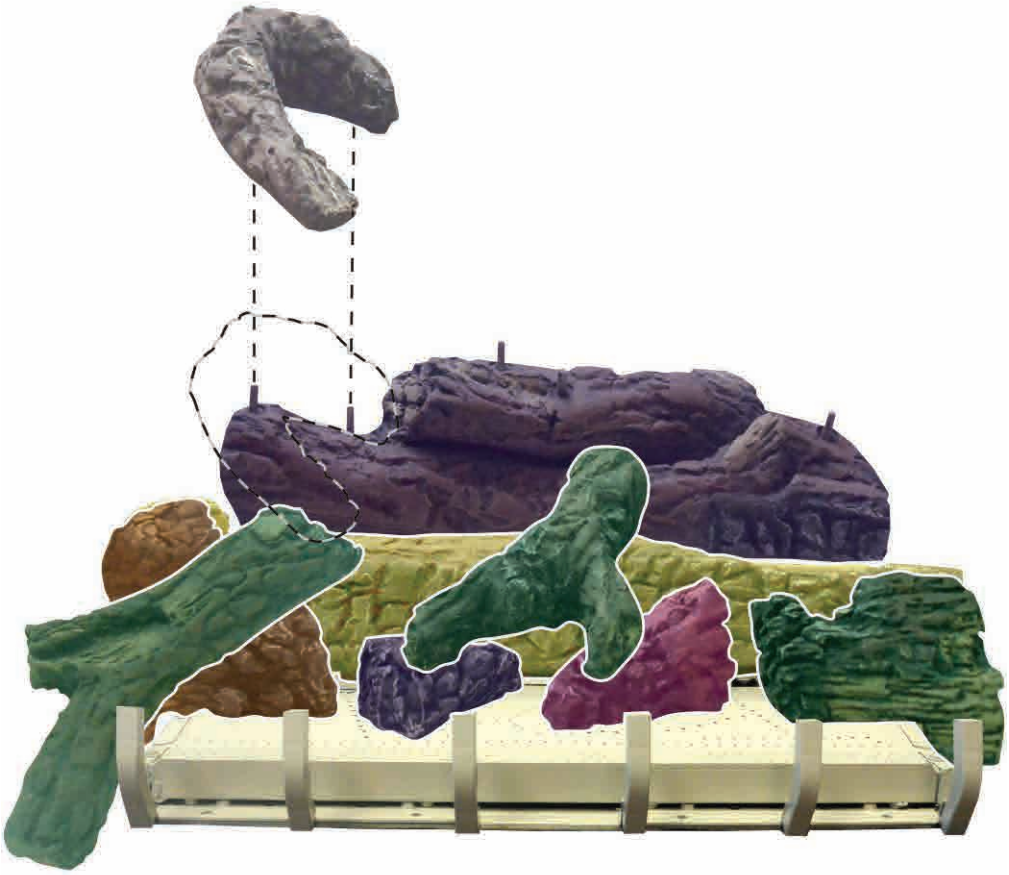

Front View

LOG PLACEMENT

13. Place **Log J** on third and fourth pins from the left on **Log B.** The "Y" branch will rest on **Log H** as shown below.

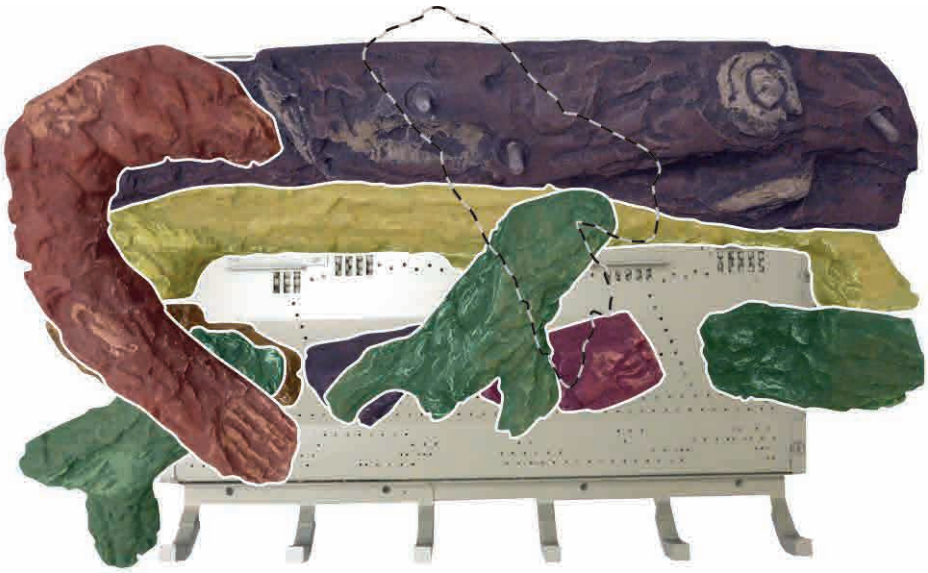

Top View

Front View

LOG PLACEMENT

14. Place **Log K** on far right pin of **Log B** as shown below.

Top View

Front View

LOG PLACEMENT

15. Place **Log L** between third and fourth grates on the burner. The short "Y" branch will point left and the bottom of the "Y" will rest on the firebox bottom. See image below.

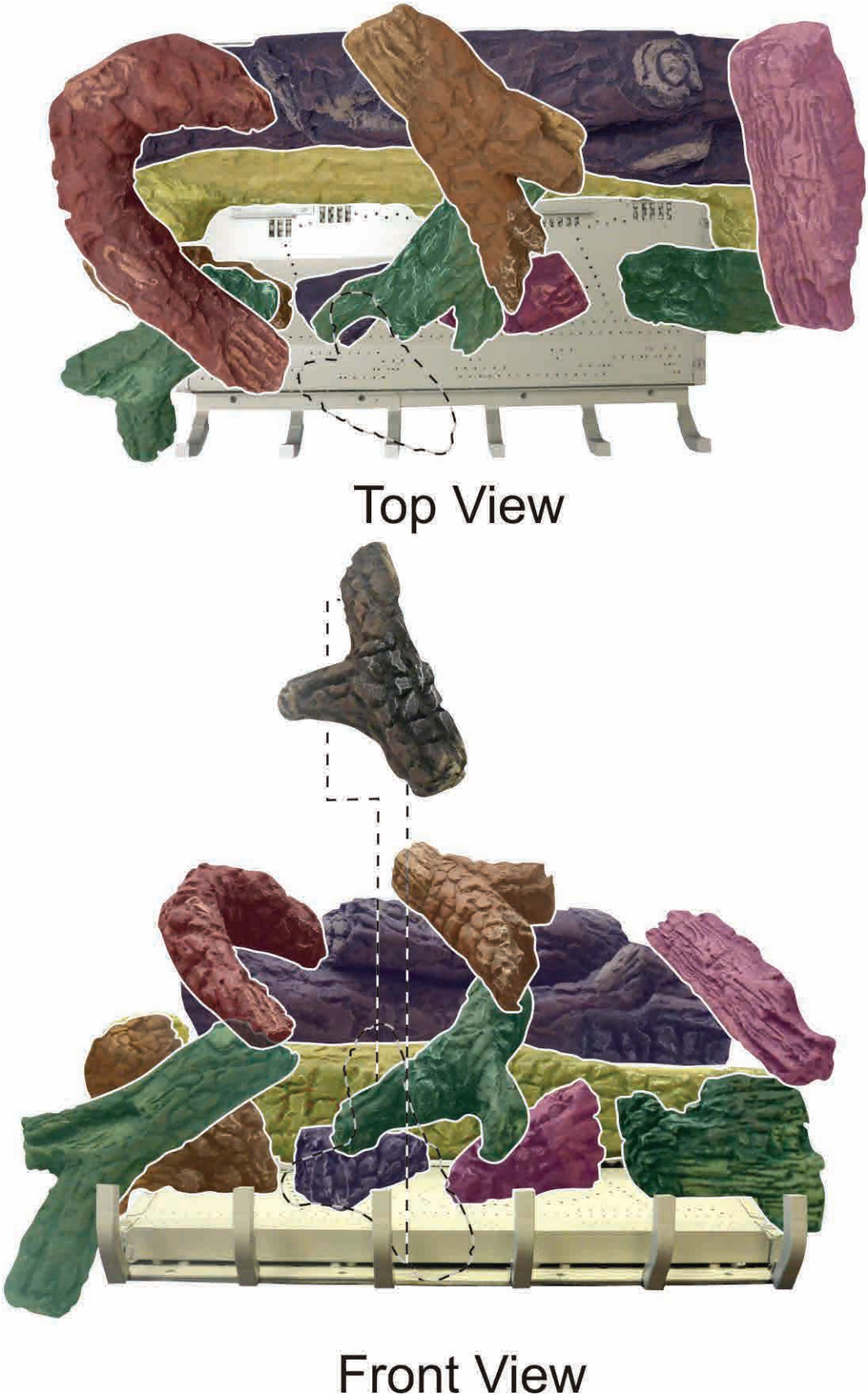

LOG PLACEMENT

16. Place **Log M** on the fifth grate from the left with the top resting on **Log K** as shown below.

Top View

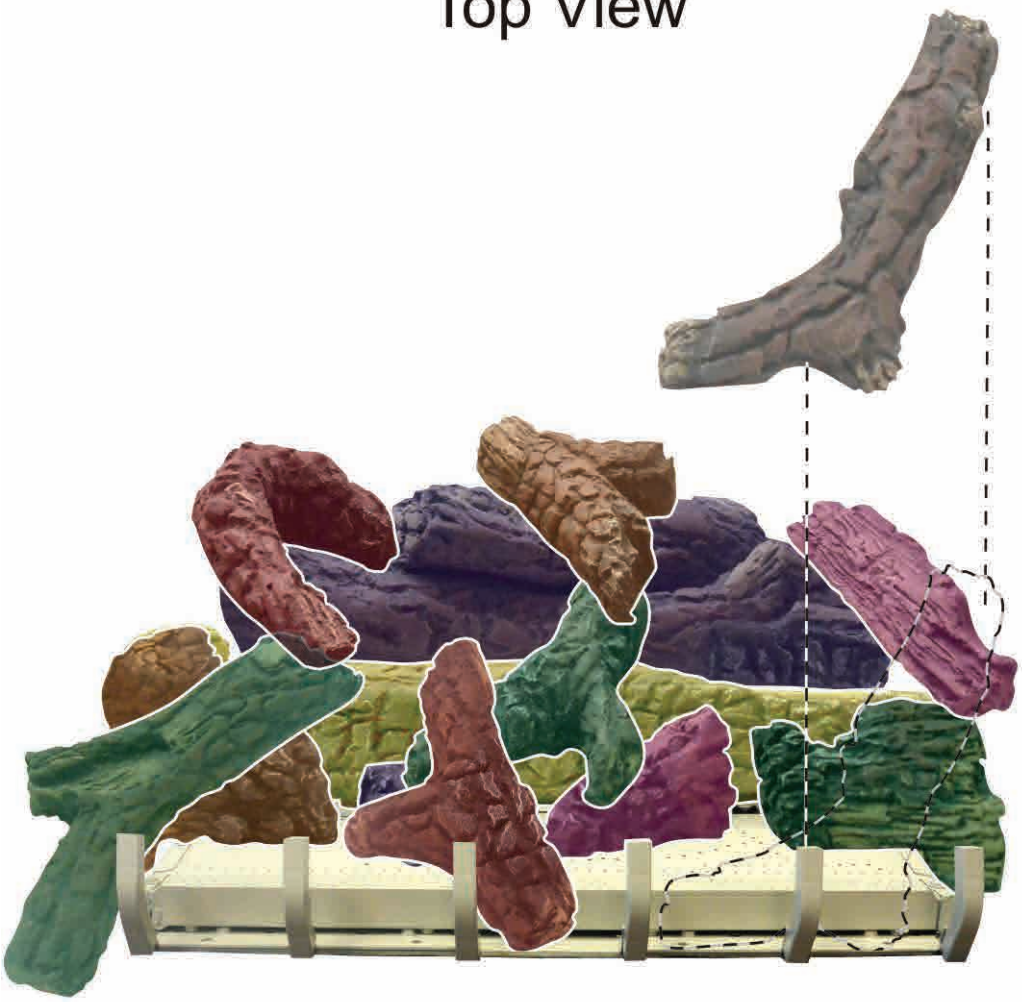

Front View

LOG PLACEMENT

17. The log assembly is now complete.

Top View

Front View

18. After all logs are properly positioned, place small "dime" size pieces of Rockwool lightly across the front round "blueflame" ports. Place the ember material (Rockwool pieces) side by side. Do not stack more than one layer of embers across the burner ports. **See Figure 64.**

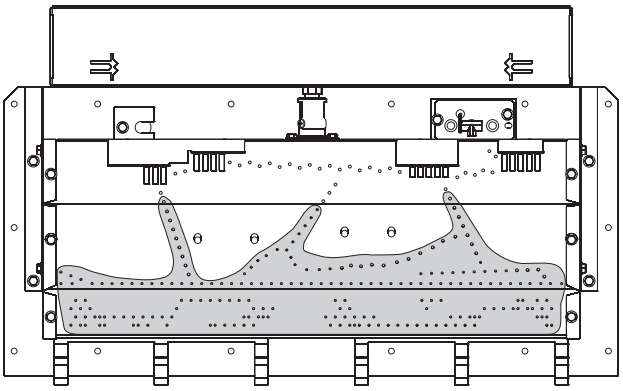

Figure 64

19. Replace glass door onto firebox.
20. Secure the two glass frame spring clamps at bottom of firebox.
21. Align the tabs on top louver brackets with slots in front posts to secure top louver.
22. Close bottom louver. Lift slightly to engage the end tabs into the slots in fireplace sides to close louver panel.

⚠ WARNING

Failure to position the parts in accordance with this diagram or failure to use only parts specifically approved with this appliance may result in property damage or personal injury.

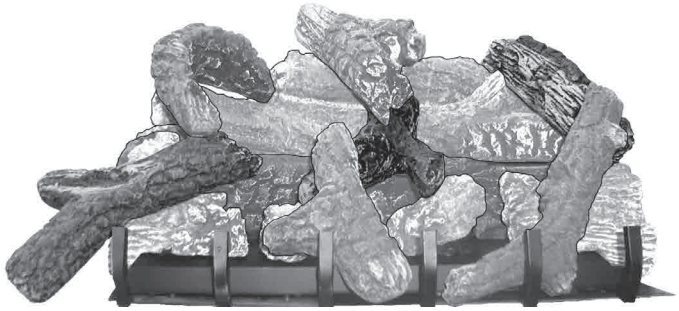

Figure 65

Attention: Refer to Log Identification Pages 42 and 43, and Figures 66 and 67 to order logs.

CAUTION: If a log is broken, cracked or chipped, order a replacement log. See page 59.

LOG PLACEMENT (13 LOG SET)

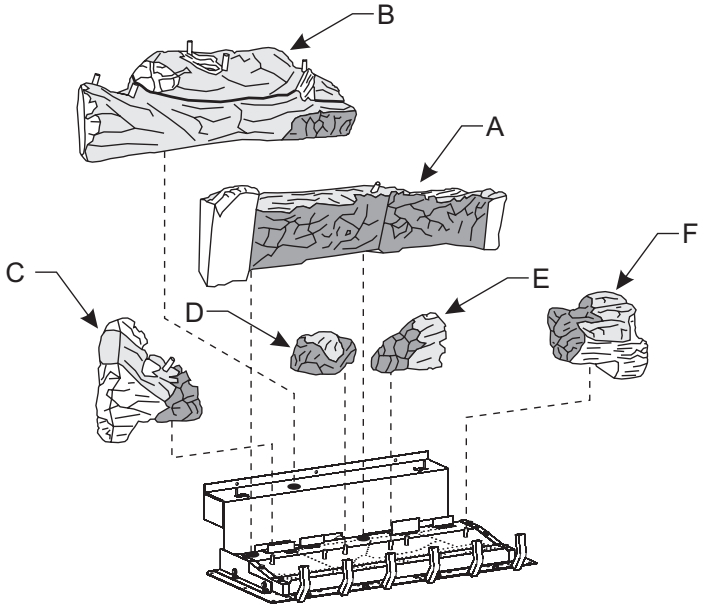

Figure 66

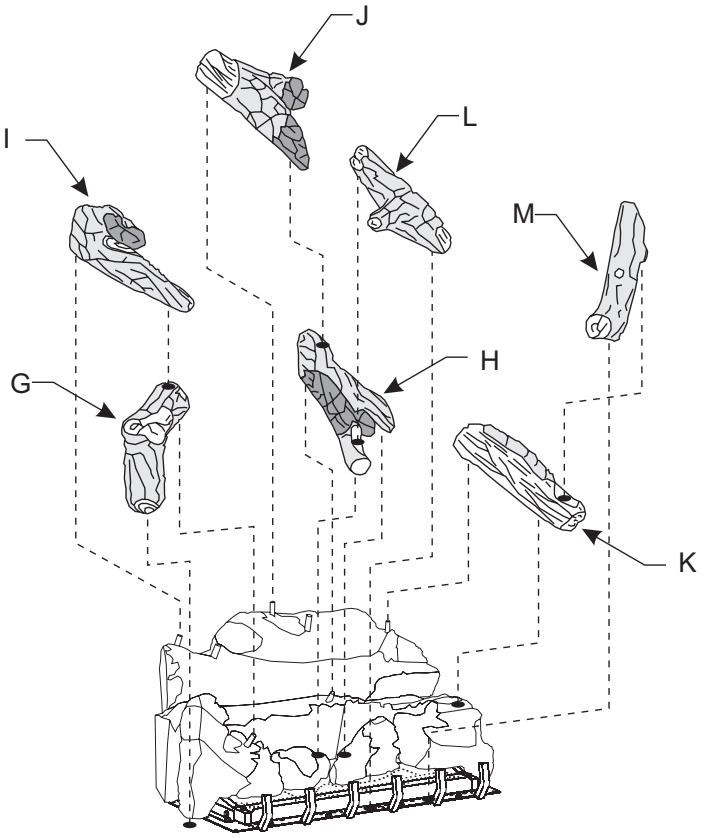

Figure 67

LOG SET PARTS LIST		
Index Letter	**Part Number**	**Description**
A	R9228	Rear Bottom Log
B	R9222	Rear Top Log
C	R9227	Bottom Left Log
D	R9372	Bottom Left Center Log
E	R9225	Bottom Right Center Log
F	R9229	Bottom Right Log
G	R9223	Front Left Log
H	R9373	Center Log
I	R9230	Top Left Log
J	R9231	Top Center Log
K	R9232	Top Right Log
L	R9224	Front Center Log
M	R9226	Front Right Log

MILLIVOLT SYSTEM OPERATING INSTRUCTIONS

750 Millivolt System

The standing pilot (750 millivolt system) is a continuous burning pilot. The pilot remains ON even when the main burner is OFF.

When you ignite the pilot, the thermopile produces millivolts (electrical current) which energizes the magnet in the gas valve. After 30 seconds to 1 minute time period you can release the gas control knob and the pilot will stay ON. Allow your pilot flame to operate an additional one to two minutes before you turn the gas control knob from the PILOT position to the ON position. This time period allows the millivolts (electrical current) to build-up to a sufficient level allowing the gas control to operate properly.

1. Follow the SAFETY and LIGHTING INSTRUCTIONS for standing pilot controls found in this manual and on labels found in control compartment behind the door assembly.

⚠ CAUTION

During the initial purging and subsequent lightings, never allow the gas valve control knob to remain depressed in the "pilot" position without pushing the piezo ignitor button at least once every second.

2. During the operating season, leave the control valve knob in the "ON" position. This will allow the pilot flame to remain lit. Turn the burner flame on or off with the fireplace Remote/OFF/ON switch, wall switch or remote controls.

***NOTICE*:** The gas control valve allows you to increase or decrease the height of the main burner flame. The control valve has a pressure regulator with a knob as shown in **Figure 70.** Rotate the knob clockwise to "HI" to increase the flame height and counterclockwise to "LO" to decrease the flame height.

3. When the operating season is over, turn the Remote/OFF/ON switch to "OFF" and the control valve to "OFF". The system, including the pilot light, will be shut down.

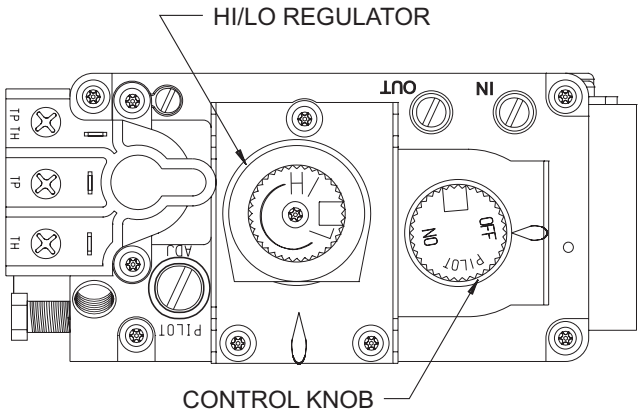

Figure 68

The OWNER should carefully read and follow these operating instructions at all times. Lower the door assembly to view the gas controls for the fireplace.

Initial Lighting

Upon completing the gas line or turning the gas valve on after it has been in the "OFF" position, a small amount of air will be in the lines. When first lighting the fireplace, it will take a few minutes for the lines to purge themselves of this air. Once the purging is complete, the fireplace will light and operate satisfactorily.

Subsequent lightings of the appliance will not require such purging if the gas valve is not turned to "OFF."

Pilot Flame

The thermopile/thermocouple (standing pilot) tips should be covered with flame.

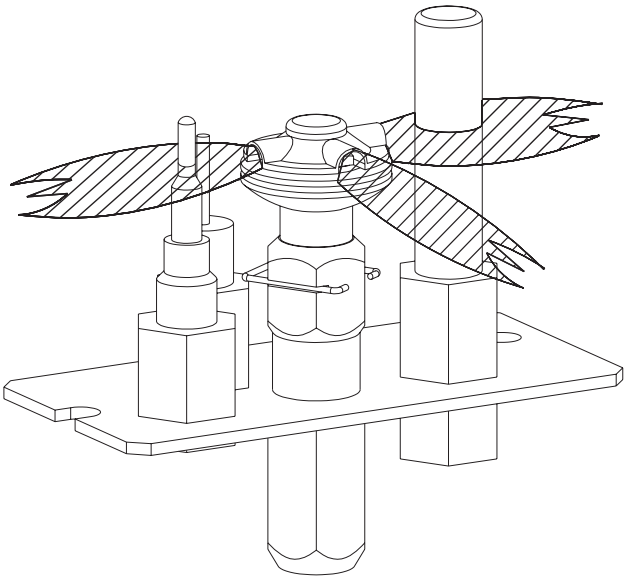

Figure 69

STANDING PILOT OPERATING INSTRUCTIONS

Remote/Off/On Switch

The fireplace is equipped with a Remote/OFF/ON switch. A wire harness is attached to the Remote/OFF/ON switch. The red, black and green (wires) female push-ons attach to the Remote/OFF/ON switch. At the opposite end of the wire harness, the black and green (wires) female push-ons attach to the gas valve. An additional green wire and the red wire, which are stripped and bare, will attach to one of the accessories that can be purchased for use with your fireplace.

Operation of REMOTE/OFF/ON Switch with no Accessories

To ignite main burner, turn the control knob on the gas valve from the PILOT position to the ON position. Turn the Remote/OFF/ON switch from the OFF position to the ON position. The additional green wire and red wire, which are stripped and bare are not used.

Wall Switch, FWS-1

Connect the green and red, stripped and bare, wires on the REMOTE/OFF/ON switch wire harness to the wall switch using wire nuts. Turn the REMOTE/OFF/ON switch to the Remote position. Pivot the rocker switch on the FWS-1 to the ON position.

Wall Thermostats (optional)

TRW - Wireless for Millivolt models
TMV - Reed switch for Millivolt models

Battery Operated Remote Controls, FRBC, FRBTC, and TRW

Connect the green and red, stripped and bare, wires on the REMOTE/OFF/ON switch wire harness to the remote receiver that is a component in the remote kit using wire nuts. Turn the REMOTE/OFF/ON switch to the remote position. Follow instructions included with the remote to complete installation.
Note: If batteries fail in the remote, and immediate heat is desired, turn the REMOTE/OFF/ON switch from the REMOTE position to the ON position.

Electric (120 volt) Operated Remote Control, FREC

Connect the green and red, stripped and bare, wires on the REMOTE/OFF/ON switch wire harness to the wires on remote receiver that is a component in the FREC using wire nuts. Turn the REMOTE/OFF/ON switch to the REMOTE position. Follow instructions in the FREC to complete installation.

NOTE: If electric (120 Volt) fails in FREC, and immediate heat is desired, turn the REMOTE/OFF/ON switch from the REMOTE position to the ON position.

Installation of Remote Receiver

Place remote receiver on the floor of fireplace behind the louver as far forward as possible.

Attention: The velcro loop and hook are not necessary in this installation but can be used to secure remote receiver.

Refer to remote control installation and operating instructions for more details on remote control.

Millivolt Control

The valve regulator controls the burner pressure which should be checked at the pressure test point. Turn captured screw counter clockwise 2 or 3 turns and then place tubing to pressure gauge over test point (Use test point “A” closest to control knob). After taking pressure reading, be sure and turn captured screw clockwise firmly to re-seal. Do not over torque. Check for gas leaks.

Millivolt thermopile is self generating. Gas valve does not require 24 volts or 110 volts.

Check System Operation

Millivolt system and all individual components may be checked with a millivolt meter 0-1000 MV range.

It is important to use wire of a gauge proper for the length of the wire:

Recommended Wire Gauges	
Maximum Length	**Wire Gauge**
1' to 10'	18
10' to 25'	16
25' to 35'	14

MILLIVOLT STANDING PILOT WIRING DIAGRAM

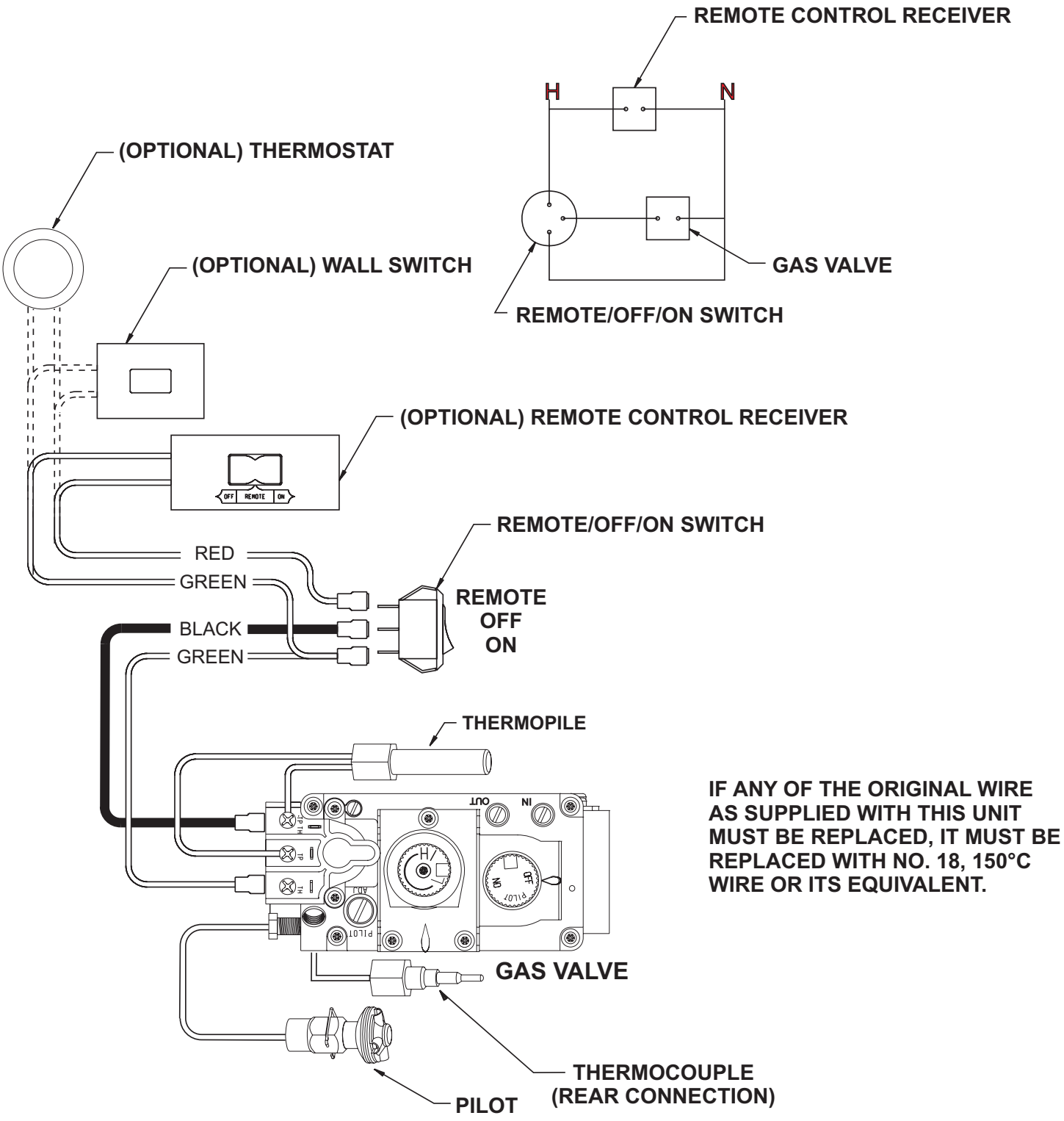

IF ANY OF THE ORIGINAL WIRE AS SUPPLIED WITH THIS UNIT MUST BE REPLACED, IT MUST BE REPLACED WITH NO. 18, 150°C WIRE OR ITS EQUIVALENT.

Figure 70

MILLIVOLT STANDING PILOT LIGHTING INSTRUCTIONS

FOR YOUR SAFETY READ BEFORE LIGHTING

⚠ WARNING

If you do not follow these instructions exactly, a fire or explosion may result causing property damage, personal injury or loss of life.

A. This appliance has a pilot which must be lighted by hand. When lighting the pilot, follow these instructions exactly.

B. Before lighting smell all around the appliance area for gas. Be sure to smell next to the floor because some gas is heavier than air and will settle on the floor.

What To Do If You Smell Gas
- Do not try to light any appliance.
- Do not touch any electrical switch;
- Do not use any phone in your building.
- Immediately call your gas supplier from a neighbor's phone. Follow the gas supplier's instructions.
- If you cannot reach your gas supplier, call the fire department.

C. Use only your hand to push in or turn the gas control knob. Never use tools. If the knob will not push in or turn by hand, don't try to repair it; call a qualified service technician. Force or attempted repair may result in a fire or explosion.

D. Do not use this appliance if any part has been under water. Immediately call a qualified service technician to inspect the appliance and to replace any part of the control system and any gas control which has been under water.

LIGHTING INSTRUCTIONS

1. Stop! Read the safety information above.
2. Set REMOTE/OFF/ON switch to OFF.
3. Turn off all electric power to the appliance (if applicable).
4. Lower bottom louver assembly.
5. Push in gas control knob slightly and turn clockwise to "OFF."
   Note: Knob cannot be turned from "PILOT" to "OFF" unless knob is pushed in slightly. Do not force.

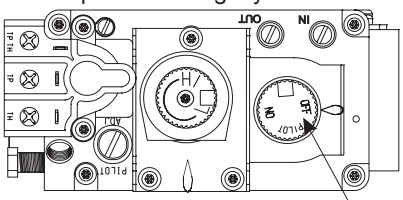

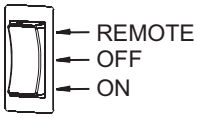

GAS CONTROL KNOB SHOWN IN "OFF" POSITION

6. Wait ten minutes to clear out any gas. Then smell for gas, including near the floor. If you then smell gas, STOP! Follow "B" in the safety information above. If you do not smell gas, go to the next step.
7. Find pilot - Follow metal tube from gas control. The pilot is behind the burner on the right side.
8. Turn gas control knob counterclockwise to "PILOT."

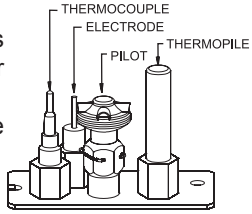

9. Push in control knob all the way and hold in. Repeatedly push the piezo ignitor button until the pilot is lit. Continue to hold the control knob in the for about one minute after the pilot is lit. Release knob, and it will pop back up. Pilot should remain lit. If it goes out, repeat steps 5 through 9.
   - If the control knob does not pop up when released, STOP and IMMEDIATELY call a qualified service technician or gas supplier.
   - If the pilot will not stay lit after several tries, turn the gas control knob to "OFF" and call your service technician or gas supplier.
10. Turn gas control knob counterclockwise to "ON."
11. Close bottom louver assembly.
12. Turn on all electric power to the appliance (if applicable).
13. Set REMOTE/OFF/ON switch to desired setting.

TO TURN OFF GAS TO APPLIANCE

1. Set REMOTE/OFF/ON switch to OFF.
2. Turn off all electric power to the appliance if service is to be performed (if applicable).
3. Lower bottom louver assembly.
4. Push in gas control knob slightly and turn clockwise to "OFF." Do not force.
5. Close bottom louver assembly.

MILLIVOLT STANDING PILOT TROUBLESHOOTING

With proper installation and maintenance, your new Direct Vent Gas Fireplace will provide years of trouble-free service. If you do experience a problem, refer to the Trouble Shooting Guide below. This guide will assist a qualified service person in the diagnosis of problems and the corrective action to be taken.

1. **Spark ignitor will not light pilot after repeated triggering of piezo ignitor button.**
   a. Defective ignitor (no spark electrode).
   —Check for spark at electrode and pilot; if no spark and electrode wire is properly connected, replace ignitor.
   b. No gas or low gas pressure.
   —Check remote shut off valves from fireplace. Usually there is a valve near the main. There can be more than one valve between the fireplace and main.
   —Low pressure can be caused by a variety of situations such as a bent line, too narrow diameter of pipe, or low line pressure. Consult with plumber or gas supplier.
   c. No Propane in tank.
   —Check Propane tank. Refill tank.
2. **Pilot will not stay lit after carefully following lighting instructions.**
   a. Defective thermocouple.
   —Check that pilot flame impinges on thermocouple. Clean and/or adjust pilot for maximum flame impingement.
   —Ensure the thermocouple connection at the gas valve is fully inserted and tight (hand tight plus 1/4 turn). Faulty thermocouple if reading is below specified minimum of 15 millivolts.
   —Disconnect the thermocouple from the valve, place one millivolt meter lead wire on the end of the thermocouple and the other millivolt meter lead wire on the thermocouple copper wire. Start the pilot and hold the valve knob in. If the millivolt reading is less than 15 millivolt, replace the thermocouple.
   b. Defective valve.
   —If thermocouple is producing more than 15 millivolts, replace faulty valve.
3. **Pilot burning, no gas to burner, valve knob "ON", REMOTE/OFF/ON switch "ON."**
   a. REMOTE/OFF/ON switch, wall switch, remote control or wires defective.
   —Check REMOTE/OFF/ON switch and wires for proper connections. Place jumper wires across terminal at switch. If burner comes on, replace defective switch. If OK, place jumper wires across switch wires at gas valve-if burner comes on, wires are faulty or connections are bad.
   b. Thermopile may not be generating sufficient millivolts.
   —If the pilot flame is not close enough physically to the thermopile, adjust the pilot flame.
   —Be sure the wire connections from the thermopile at the gas valve terminals are tight and the thermopile is fully inserted into the pilot bracket.
   —Check the thermopile with a millivolt meter. Take the reading at TH-TP & TP terminals of the gas valve. The meter should read 350 millivolts minimum, while holding the valve knob depressed in the pilot position, with the pilot lit, and the REMOTE/OFF/ON switch in the OFF position. Replace the faulty thermopile if the reading is below the specified minimum.
   —With the pilot in the ON position, disconnect the thermopile leads from the valve. Take a reading at the thermopile leads. The reading should be 350 millivolts minimum. Replace the thermopile if the reading is below the minimum.
   c. Defective valve.
   —Turn valve knob to ON. Place REMOTE/OFF/ON switch to ON. Check with millivolt meter at thermopile terminals. Millivolt meter should read greater than 200 millivolts. If the reading is okay and the main burner does not ignite, replace the gas valve.
   d. Plugged main burner orifice.
   —Check main burner orifice for blockage and remove.
4. **Frequent pilot outage problem.**
   a. Pilot flame may be too high or too low, or blowing (high), causing pilot safety to drop out.
   —Clean and adjust flame for maximum flame impingement on the thermocouple. Follow lighting instructions carefully.
5. **The pilot and main burner extinguish while in operation.**
   a. No Propane in tank.
   Check Propane tank. Refill fuel tank.
   b. Inner vent pipe leaking exhaust gases back into system.
   —Check for leaks.
   c. Glass too loose, gasket leaks in corners after usage.
   —Be certain glass assembly is installed correctly.
   d. Horizontal vent improperly pitched.
   —The horizontal vent cap should slope down only enough to prevent any water from entering the unit. The maximum downwards slope is 1/4 inch.
   e. Bad thermopile or thermocouple.
   —Replace if necessary.
   f. Improper vent cap installation.
   —Check for proper installation and freedom from debris or blockage.
6. **Glass soots.**
   a. Flame impingement on logs.
   —Check and adjust log position. Contact Empire Comfort Systems, Inc.
   b. Debris around throat of main burner.
   —Inspect the opening at the base of the main burner. It is imperative that NO material be placed in this opening.
7. **Flame burns blue and lifts off main burner.**
   a. Insufficient oxygen being supplied.
   —Check to make sure vent cap is installed properly and free of debris. Make sure that vent system joints are tight and have no leaks.
   —Check to make sure that no material has been placed at the main burner base.

IPI ELECTRONIC SYSTEM OPERATING INSTRUCTIONS

5.25 VDC ELECTRONIC CONTROL VALVE

The electronic control valve system includes the ability to switch the pilot from a standing pilot mode to an intermittent pilot mode.

- **IPI Mode** - In the Intermittent Pilot mode, when the unit is turned ON, it will cause spark to the pilot, light the pilot, then allow the burner to light. When the unit is turned to OFF, both the burner and pilot will be OFF.
- **CPI Mode** - In the Continuess Pilot mode, the pilot remains ON continuously even when the burner is turned OFF.

NOTE: A small toggle switch is located on the front of the module tray that is used to switch from IPI (left) to the CPI (right).

When the unit is turned to ON, the electrical current will energize a spark to the pilot igniter. Once the pilot sensor heats up (after a few seconds), the valve will be energized, allowing gas to flow to the burner.

1. Follow the SAFETY and LIGHTING INSTRUCTIONS for Intermittent Pilot controls found in this manual, and on labels found in the control compartment located in the lower cavity of the appliance.
2. During the operating season (or in power outage periods), it is recommended that the pilot remain in the CPI (standing pilot mode) to reduce cold start issues, and/or conserve battery backup power during a power outage.
3. The gas valve has inlet and outlet pressure taps. Refer to page 12 for gas pressure requirements.

NOTE: The gas control has a manual HI/LO flame adjustment knob (regulator) that allows you to increase or decrease the height of the burner flame. Rotate the HI/LO knob counterclockwise to “HI” to increase the flame height, and clockwise to “LO” to decrease the flame height.

OPTIONAL REMOTE CONTROLS

Optional remote controls are available for use with this appliance. It is recommended that the remote receiver be placed either in a wall outlet box with extended wiring, on the fireplace hearth, behind the left side surround panel, or in the control compartment area as far forward in the insert as possible.

The placement options for the remote receiver are given to allow flexibility, however battery life will be extended when the receiver is placed in cooler areas.

To connect the remote receiver to the appliance, first disconnect the ON/OFF switch wires from the white and green wire connectors and connect the wires from the remote receiver to the green and white wire connectors.

Follow the instructions included with the remote control for programming and other operational information.

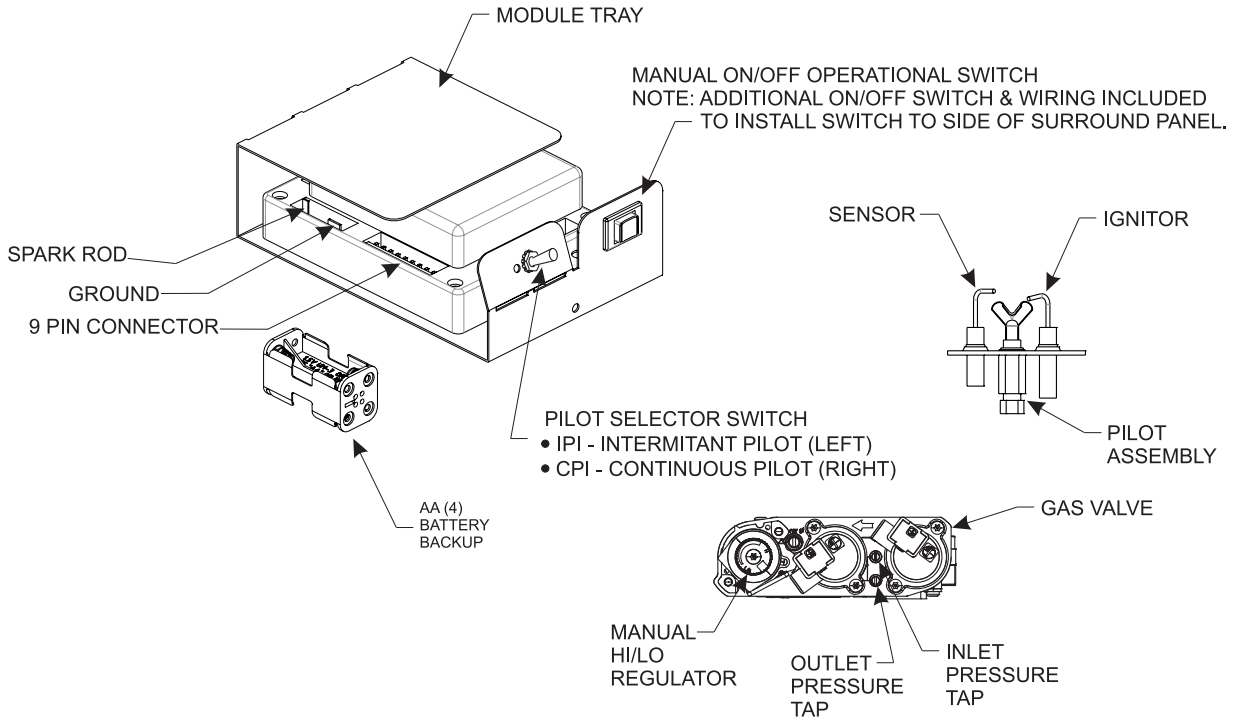

IPI ELECTRONIC SYSTEM WIRING DIAGRAM

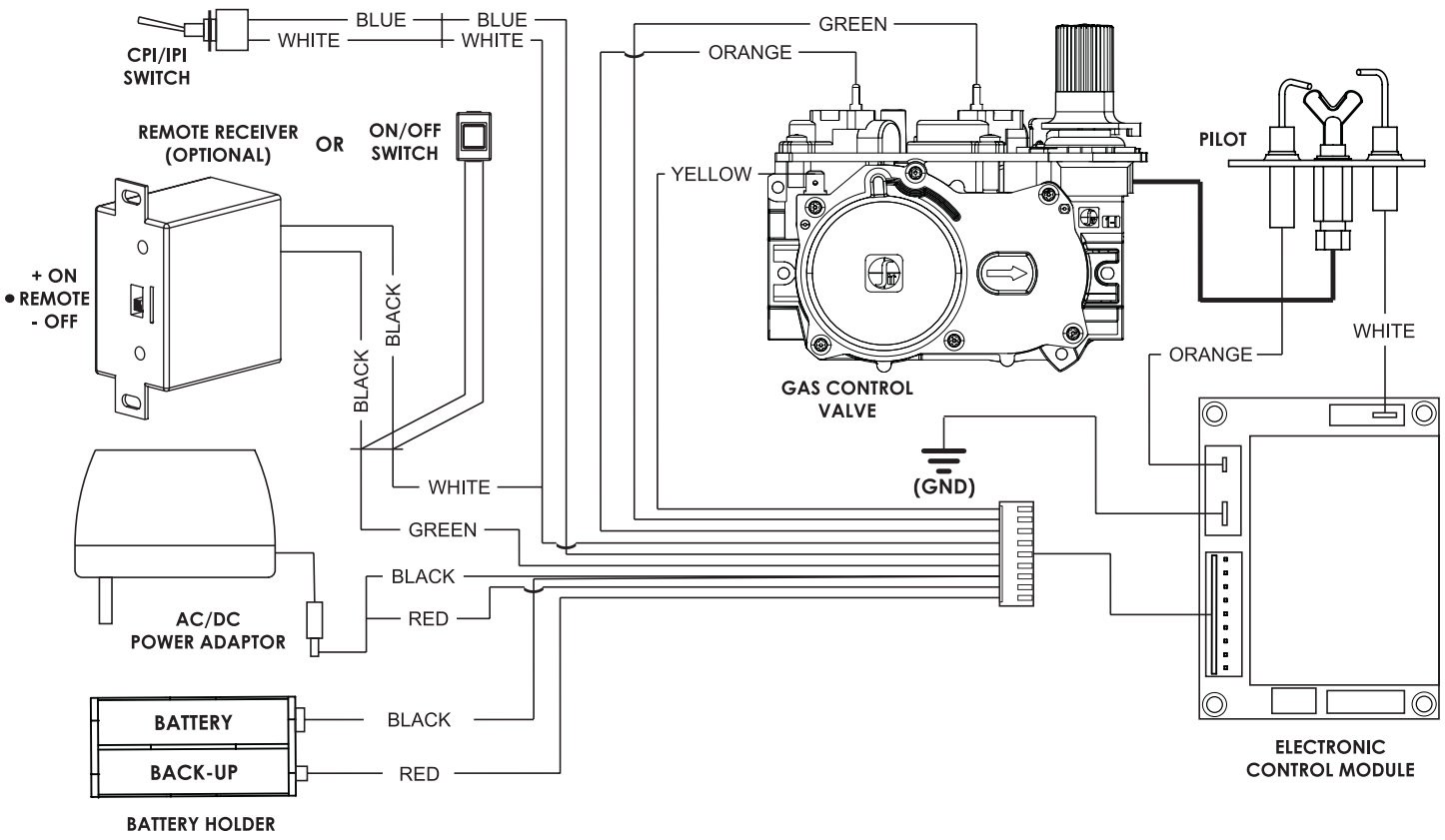

If any of the original wire as supplied with this unit must be replaced, it must be replaced with equivalent gauge and temperature rated wire.

This appliance is only for use with the type of gas indicated on the rating plate and may be installed in an aftermarket, permanently located, manufactured (mobile) home where not prohibited by local codes. This appliance is not convertible for use with other gases, unless a certified kit is used.

⚠ CAUTION

Do not operate the appliance with liner(s) removed, cracked or broken. Replacement of the liner(s) should be done by a licensed or qualified service person.

⚠ WARNING

Improper installation, adjustment, alteration, service or maintenance can cause property damage, personal injury or loss of life. Installation and service must be performed by a qualified installer, service agency or the gas supplier.

INTERMITTENT PILOT LIGHTING INSTRUCTIONS

FOR YOUR SAFETY READ BEFORE LIGHTING

⚠ WARNING

If you do not follow these instructions exactly, a fire or explosion may result causing property damage, personal injury or loss of life.

A. This appliance has a pilot which can be lighted with the manual on/off switch, a remote control, or by switching the receiver switch to the "ON" position. When lighting the pilot, follow these instructions exactly.

B. BEFORE LIGHTING smell all around the appliance area for gas. Be sure to smell next to the floor because some gas is heavier than air and will settle on the floor.
WHAT TO DO IF YOU SMELL GAS
Do not try to light any appliance. Do not touch any electrical switch. Do not use any phone in your building. Immediately call your gas supplier from a neighbor's phone. Follow the gas supplier's instructions. If you can not reach your gas supplier, call the fire department.

C. Use only the remote control or manual remote receiver switch to operate the gas valve. Never use tools. If valve does not operate, don't try to repair it, call a qualified service technician. Force or attempted repair may result in a fire or explosion.

D. Do not use this appliance if any part has been under water. Immediately call a qualified service technician to inspect the appliance and to replace any part of the control system and any gas control which has been under water.

LIGHTING INSTRUCTIONS

1. STOP! Read the safety information above.
2. Turn OFF electric power to the appliance.
3. Remove front surround panel assembly or bottom louver if included.
4. Turn gas shut-off counterclockwise ↺ to "On" position.
5. Wait ten minutes to clear out any gas. Then smell for gas, including near the floor. If you smell gas, STOP! Follow "B" in the safety information above on this page. If you do not smell gas, go to the next step.
6. Turn ON electric power to the appliance.
7. Find pilot - Follow metal tube from gas control. The pilot is behind the burner on the right side.
8. Turn main flame to on. If the pilot does not light within 60 seconds, stop and go to Step 5.
9. Refer to remote control instructions for detailed information, control features, and operation. Note: There is a CPI/IPI switch that allows for a continuous standing pilot mode or an intermittent pilot mode. See appliance manual for location of this switch. If the pilot or burner does not stay lit (in the standing pilot mode), stop and immediately call a qualified service technician or gas supplier.
10. If the burner or pilot does not operate properly after several tries, turn the gas shut-off clockwise ↻ to "OFF" and call your service technician or gas supplier.
11. Replace the front surround assembly or close bottom louver assembly.
12. Operation of the gas valve is controlled by a manual on/off switch or a hand held remote control. Refer to remote instructions for detailed operation information.

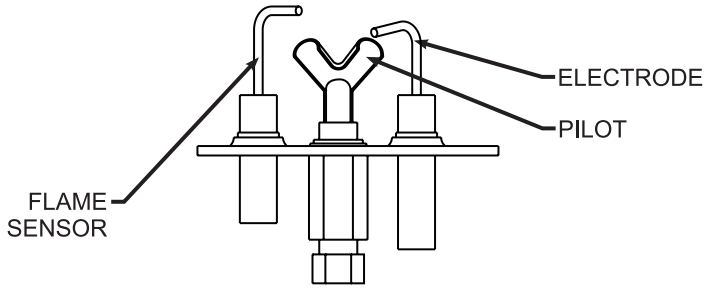

GAS SHUT-OFF VALVE

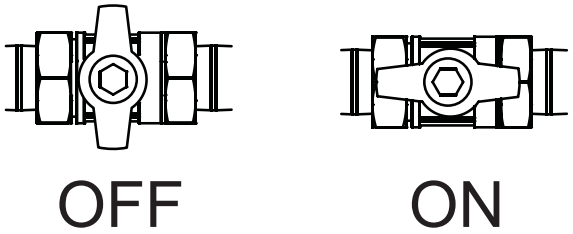

TO TURN OFF GAS TO APPLIANCE

1. Turn off all electric power to the appliance if service is to be performed (if applicable).
2. Gain access to control compart. Remove surround panel assembly if necessary.
3. Locate On/Off gas shut-off and turn clockwise to ↻ "OFF". Do not force.
4. Close bottom louver assembly, if included.

INTERMITTENT PILOT CONTROL SYSTEM TROUBLESHOOTING

Brief Description of the Components

The gas valve is fitted with a manual HI/LO knob to allow for manual modulation of the gas outlet pressure to the appliance burner. The controls are designed to be used with either Propane Gas or Natural Gas and can be converted by use of an OEM supplied conversion kit.

The Digital Fireplace Control (DFC) is an automatic gas ignition system based on a single microcontroller core. This control manages all functions related to ignition, flame sensing and supervision for atmospheric applications.

The DFC can be set to provide continuous or intermittent ignition control sequences and flame monitoring with safety shutdown in case of failure.

The DFC is set up as a stand alone (AC powered system with battery back up). See Lighting Instructions on page 57 and Wiring Diagram on page 56.

.

Troubleshooting

Before proceeding with the procedures in the following troubleshooting table, verify that the power supply (AC/DC adapter) is present and that the batteries inside the receiver and/or optional battery pack are fresh and installed with correct polarity.

Make sure all the connections between the wire harnesses and system components are proper and positive.

Verify that the static inlet pressure meets the manufacturer's recommended inlet pressure. If necessary adjust the line pressure regulator.

If the recommended actions for the following troubleshooting chart do not help to address the problem consider replacing wiring harnesses.

⚠ WARNING

Any actions performed on the gas valve must be performed in accordance with this instruction manual. Likewise, any actions performed on the DFC or other system components must be done in accordance with the individual component instructions.

Replacement of components must be performed in accordance with this instructions manual.

INTERMITTENT PILOT CONTROL SYSTEM TROUBLESHOOTING

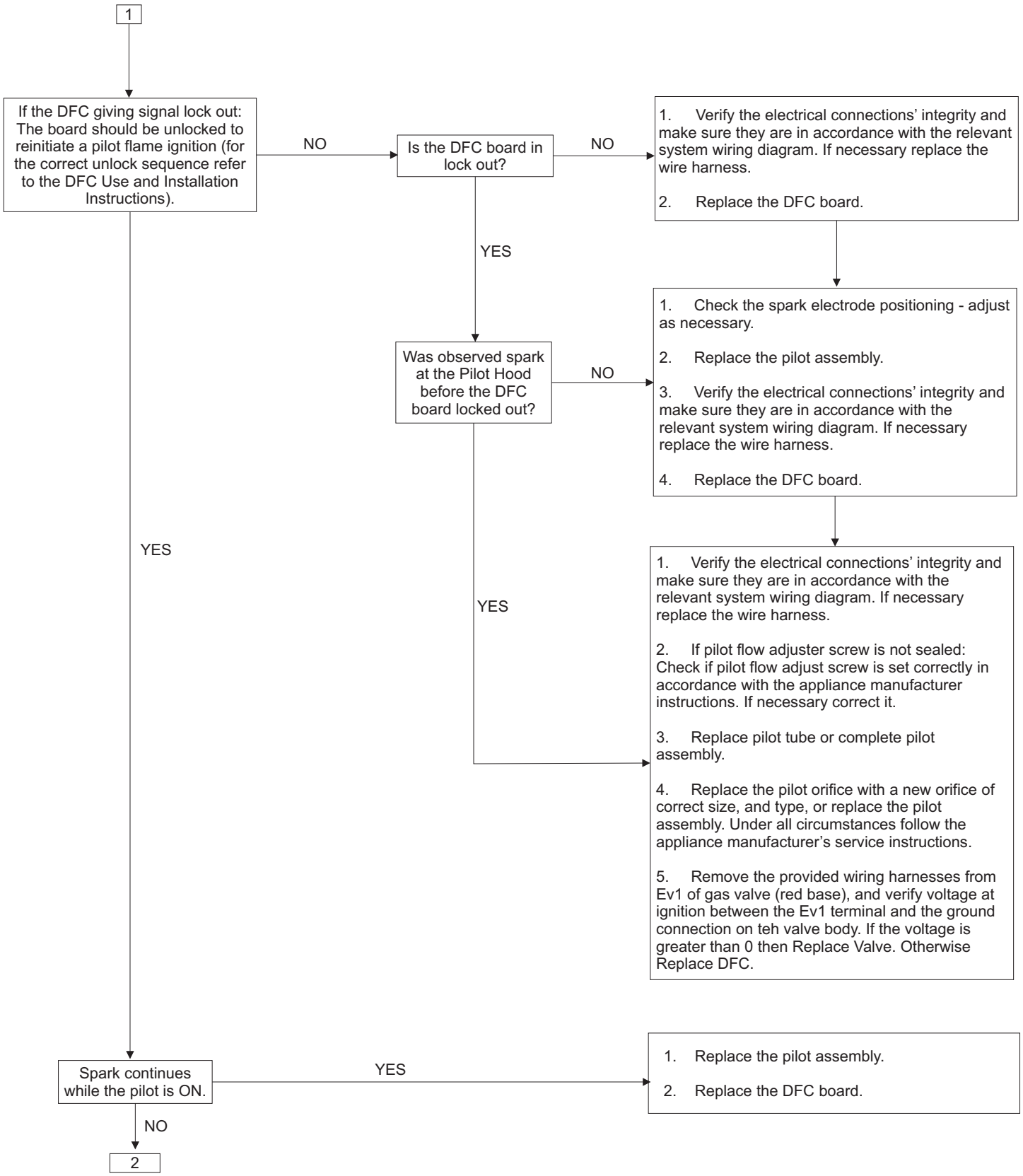

INTERMITTENT PILOT CONTROL SYSTEM TROUBLESHOOTING

2

Main burner lights when the pilot only should light.

YES →

1. Replace DFC board.
2. Replace the gas valve.

NO ↓

Pilot holds the flame?.

NO →

1. Verify the pilot flame fully engulfs the tip of the sense electrode. If not replace the pilot assembly.
2. Replace the pilot assembly.
3. Carefully clean the electrical connections of the sense cable, and the DFC board sense cable connection.
4. Replace the sense cable, or the cable-sense electrode assembly, or the pilot assembly.
5. Verify the pilot is properly grounded.
6. Replace the pilot orifice with a new orifice of correct size, and type, or replace the pilot assembly.
7. If pilot flow adjuster screw is not sealed, correct it.

YES ↓

Main burner ignites?

NO →

1. Verify the electrical connections' integrity and make sure they are in accordance with the relevant system wiring diagram. If necessary replace the wire harness.
2. Check if the optional remote transmitter is in "thermostat" or "on" mode and verifyt there is a call for heat (f using a thermostat remote). Adjust the setting for heat.
3. Verify that the pilot hood is properly fitted and a pilot flame is directed to properly ignite the main appliance burner.
4. Replace the main burner orifice with a new orifice of correct size and type, or replace the pilot assembly. Under all circumstances follow the service instructions.
5. Remove the provided wiring harnesses from EV2 of gas valve (red base), and verify voltage at ignition between the EV1 terminal and the ground connection on the valve body.
   5.1 If the voltage is greater than 0 then Replace Valve.
   5.2 Or Replace DFC.
6. Check the pressure at the outlet pressure test point out according to the manufacturer's instruction. If not in accordance, replace the gas valve.

YES ↓

Main burner remains ON

NO →

1. Verify the electrical connections' integrity and make sure they are in accordance with the relevant system wiring diagram. If necessary replace the wire harness.
2. Check the pressure at the outlet pressure test point out according the manufacturer's instruction. If not in accordance replace the gas valve.
3. With the system in the OFF position, connect the voltmeter between the EV2 terminal (green base) on the valve, and the ground on the valve body.
   Turn the system ON, let pilot light, and observe the following voltage sequence: once the pilot flame is proved, the voltage on EV2 should spike to approx. 5 VdC for approx. 2 sec and then drop to approx. 0.6 VdC continuously.
   3.1 If the sequence is respected, replace the gas valve.
   3.2 If the sequence is not respected, replace the DFC board.

↓

Main burner modulates properly?

→

1. Replace the main burner orifice with a new orifice of correct size (partial blockage possible). Verify that the main burner flame modulates. If it does not modulate replace the gas valve.
2. Verify that the gas valve outlet pressure limits are in accordance with the manufacturer specifications. If not replace the gas valve.

FOR MANUAL HI/LO VERSION

3. Verify the flame changes while rotating the HI/LO knob on the front of the gas valve. If there is no change replace the gas valve.

REMOTE CONTROL OPERATION INSTRUCTIONS

NOTICE: ON/OFF rocker switch must be ON for the remote to operate.

FEATURES*:*
Main Burner ON/OFF
Main Burner flame modulation (6 levels)
Choice of standing or intermittent pilot
Thermostat or Smart thermostat functions
On/Off relay*
Comfort Fan speed modulation (6 levels)
Accent Light modulation (6 levels)

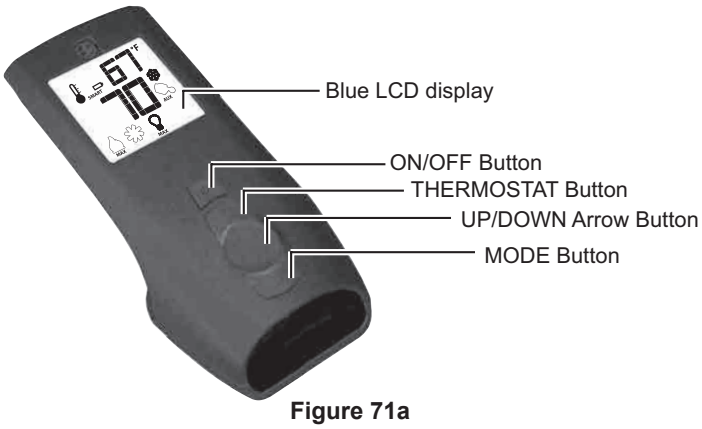

Figure 71a

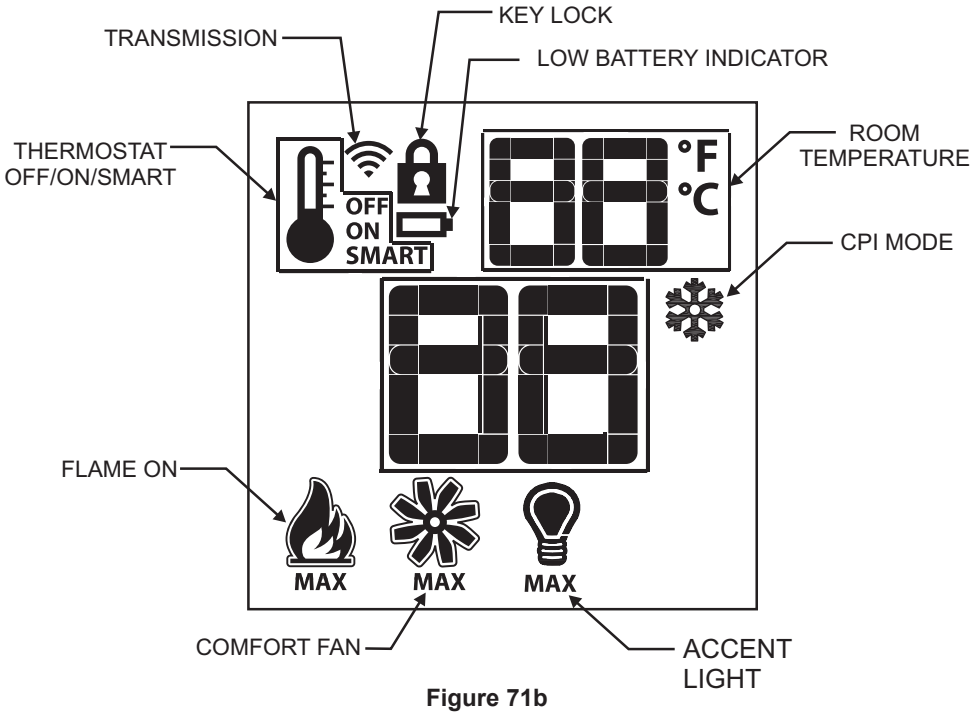

Figure 71b

REMOTE CONTROL INFORMATION
Supply Voltage: 4.5 V (three 1.5 V AAA batteries)
Ambient Temperature Ratings: 0 - 50°C (32 - 122°F)
Radio Frequency: 315 MHz

NOTICE: THE TRANSMITTER AND RECEIVER ARE RADIO FREQUENCY DEVICES. PLACING THE RECEIVER IN OR NEAR METAL SEVERELY REDUCES THE SIGNAL RANGE.

NOTICE: TURN “OFF” THE MAIN GAS SUPPLY OF THE APPLIANCE DURING INSTALLATION OR MAINTENANCE OF THE RECEIVER DEVICE.

NOTICE: FOR INSTALLATION/MAINTENANCE, SWITCH OFF THE INSERT BY REMOVING MAIN POWER SUPPLY AND BATTERIES IF INSTALLED.

⚠ WARNING

- **FIRE HAZARD. Can cause severe injury or death.**
- **The Transmitter causes ignition of the appliance. The appliance can turn on suddenly.**
- **Keep away from the appliance burner when operating the remote system.**

REMOTE CONTROL OPERATION INSTRUCTIONS

INITIALIZING THE SYSTEM FOR THE FIRST TIME

1. Install the three AAA type batteries in the Transmitter battery bay located on the base of the Transmitter (back side). **See Figure 72.**
2. Power the receiver
3. With the ON/OFF rocker switch turned ON, press red button on the module.
4. The Receiver will “beep” three times to indicate that it is ready to synchronize with a Transmitter.
5. With the batteries already installed in the Transmitter, push the “ON” button. The Receiver will “beep” to indicate the Transmitter’s command is accepted and set to the particular code of that Transmitter.
6. The system is now initialized.

Figure 72

TEMPERATURE INDICATION DISPLAY

With the system in the “OFF” position, press the THERMOSTAT key and the MODE key at the same time.
Look at the LCD screen on the Transmitter to verify that a °C or °F is visible to the right of the Room Temperature display. **See Figures 73a and 73b.**

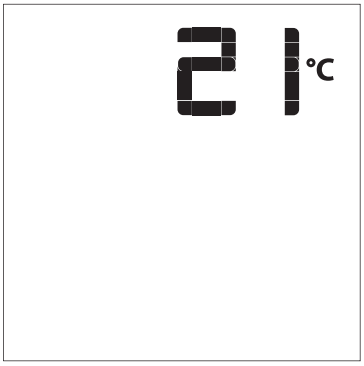

Figure 73a - Degrees Celsius

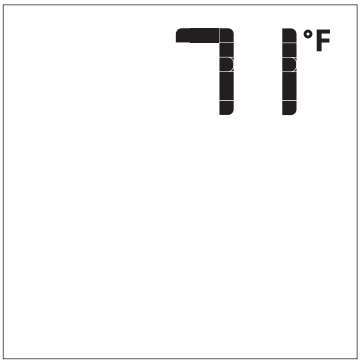

Figure 73b - Degrees Fahrenheit

TURN THE APPLIANCE ON AND OFF

1. With the system OFF, press the ON/OFF key on the Transmitter. The Transmitter LCD display will show some other active Icons on the screen. At the same time the Receiver will activate the appliance.
2. A “beep” from the Receiver will confirm reception of the command.
3. TURN OFF THE APPLIANCE
4. With the system ON , press the ON/OFF Key on the Transmitter. The Transmitter LCD display will show the room temperature. **See Figure 74.** At the same time the Receiver will turn off the appliance.
5. A “beep” from the Receiver confirms reception of the command.

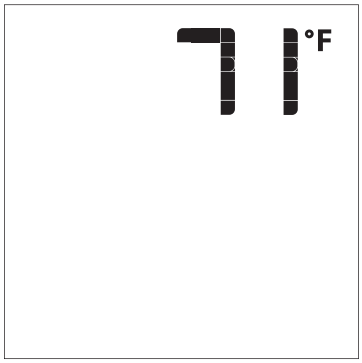

Figure 74

REMOTE FLAME CONTROL
The Proflame has six flame levels.

With the system ON and the flame level at the maximum in the appliance, pressing the DOWN ARROW key once will reduce the flame height by one step until the flame is turned OFF.

The UP ARROW key will increase the flame height each time it is pressed.

If the UP ARROW key is pressed while the system is ON but the flame is OFF, the flame will come ON in the high position.

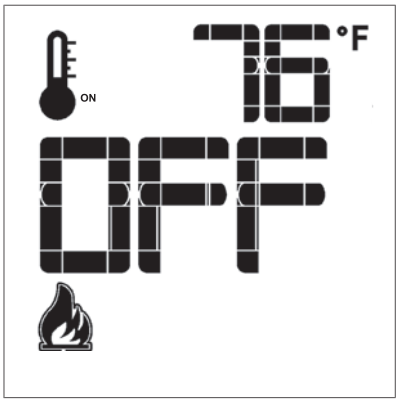

Figure 75 - Flame OFF

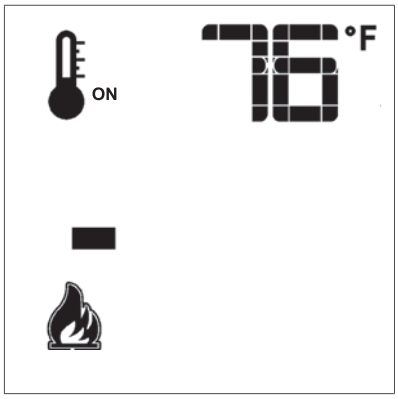

Figure 76 - Flame Level 1

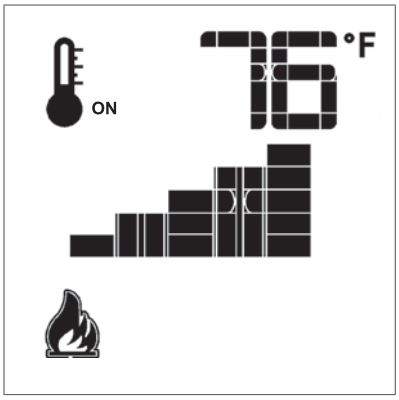

Figure 77 - Flame Level 5

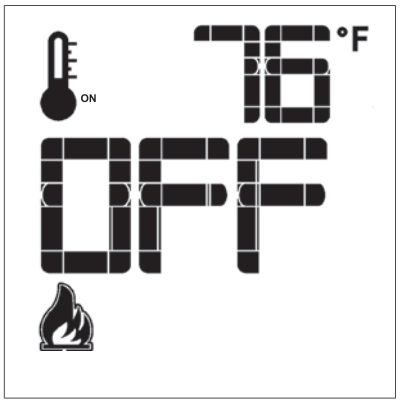

Figure 78 - Flame Level Maximum

THERMOSTAT TRANSMITTER OPERATION
The Remote Control can operate as a room thermostat. The thermostat can be set to a desired temperature to control the comfort level in a room.

To activate the function, press the THERMOSTAT key. **See Figure 71a.** The LCD display on the Transmitter will change to show that the room thermostat is “ON” and the set temperature is now displayed. **See Figure 79.**

To adjust the set temperature, press the UP or DOWN ARROW keys until the desired set temperature is displayed on the LCD screen of the Transmitter.

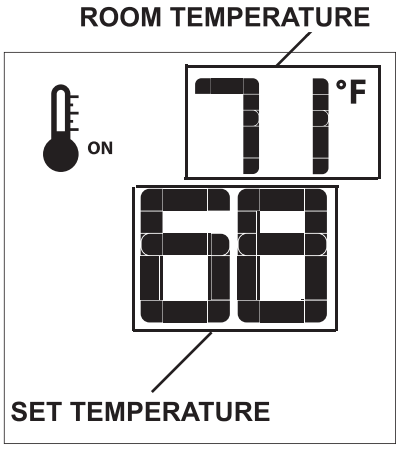

Figure 79

SMART THERMOSTAT OPERATION

The Smart Thermostat function adjusts the flame height in accordance with the difference between the set point temperature and the actual room temperatures.

As the room temperature gets closer to the set point the Smart Function will modulate the flame down.

To activate this function, press the THERMOSTAT key until the word “SMART” appears to the right of the temperature bulb graphic.

To adjust the set temperature, press the UP or DOWN ARROW keys until the desired set temperature is displayed on the LCD screen of the Transmitter.

NOTICE: When Smart Thermostat is activated, the manual flame height adjustment is disabled.

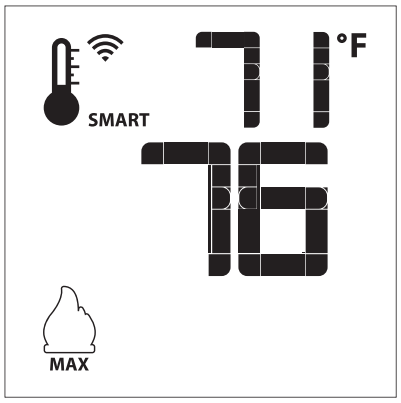

Figure 80 - SMART Function Icon

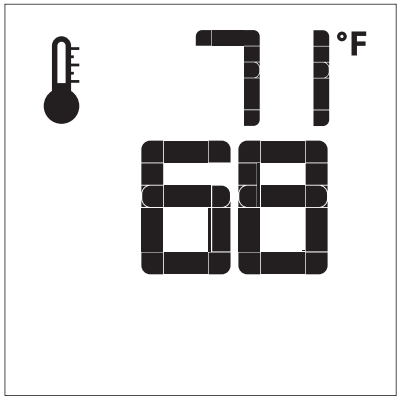

Figure 81

FAN SPEED CONTROL

The speed of the fan can be controlled by the Proflame system. The fan speed can be adjusted through six speeds.
To activate this function, use the MODE key **(Figure 70a)** to index to the fan control icon. **See Figure 82.**
Use the UP/DOWN ARROW keys to turn on, off or adjust fan speed. **See Figures 71a and 83.**
A single “beep” will confirm reception of the command.

Figure 82 - Fan Icon

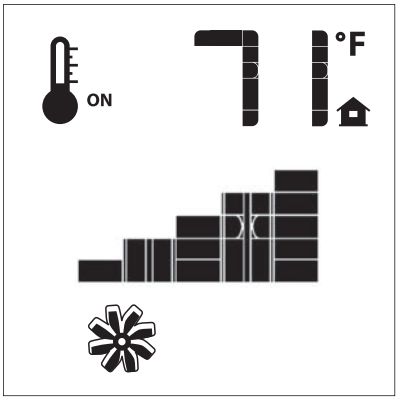

Figure 83 - Fan Speed Control Activated

ACCENT LIGHT CONTROL

The light function controls the light by the dimmable light control. To activate this function, use the Mode Button **Figure 71a** to index to the Light icon. **See Figures 84 and 85.**

The intensity of the output can be adjusted through six levels. Use the Up/Down Arrow Buttons **Figure 71a** to adjust the output level. A single “beep” will confirm reception of the command.

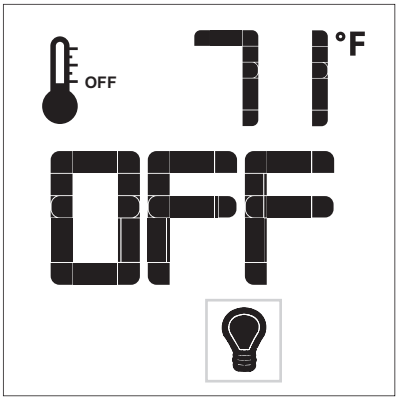

Figure 84

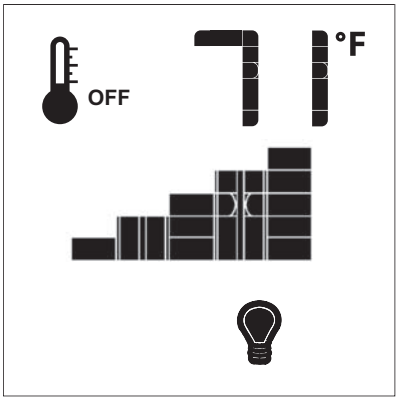

Figure 85

CONTINUOUS PILOT/INTERMITTENT PILOT (CPI/IPI) SELECTION

With the system in “OFF” position press the MODE key **(Figure 70a)** to index to the CPI mode icon. **See Figures 85 and 86.**

Pressing the UP ARROW key will activate the Continuous Pilot Ignition mode (CPI).

Pressing the DOWN ARROW key will return to IPI.

A single “beep” will confirm the reception of the command.

Figure 86

Figure 87

KEY LOCK

This function will lock the keys to avoid unsupervised operation.

To activate this function, press MODE and UP keys at the same time. A Lock and Key icon will appear to the right of the temperature icon.

To deactivate this function, press MODE and UP Keys at the same time.

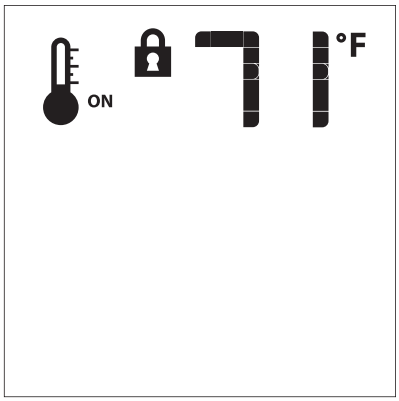

Figure 88

LOW BATTERY DETECTION

The life span of the remote control batteries depends on various factors: quality of the batteries used, the number of ignitions of the appliance, the number of changes to the room thermostat set point, etc.

When the Transmitter batteries are low, a Battery icon will appear on the LCD display of the Transmitter **Figure 89** before all battery power is lost. When the batteries are replaced, this icon will disappear.

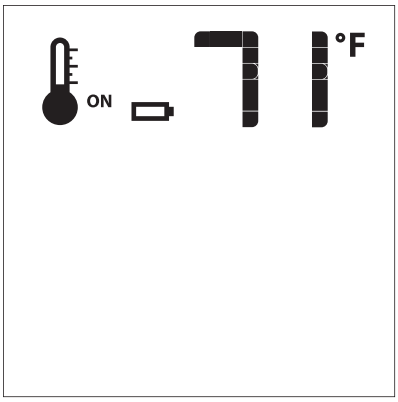

Figure 89

USING WITHOUT A REMOTE CONTROL

Remove the decorative front and outer surround to access the module. With the ON/OFF rocker switch in the ON position, press with SW1 button on the module. The module will beep 3 times to indicate that it is ready to synchronize with a remote. If no remote is found, the module will enter Manual Mode and the flame and pilot will light. The insert can now be turned ON and OFF with the rocker switch. To enter Remote Mode again, follow the initialization sequence in 15C.

BATTERY BACKUP OPERATION

To operate the insert on Battery Backup, remove the decorative front and outer surround to access the module. Locate the battery holder and install 4 AA batteries into it. The insert will now operate without flame level adjustment or fan.

LOW BATTERY DETECTION MODULE

When the module batteries are low, a double-beep will be emitted when it receives an ON/OFF command. No more commands will be accepted until the batteries are changed or the insert is plugged in.

REMOTE CONTROL SYSTEM - WIRING DIAGRAM

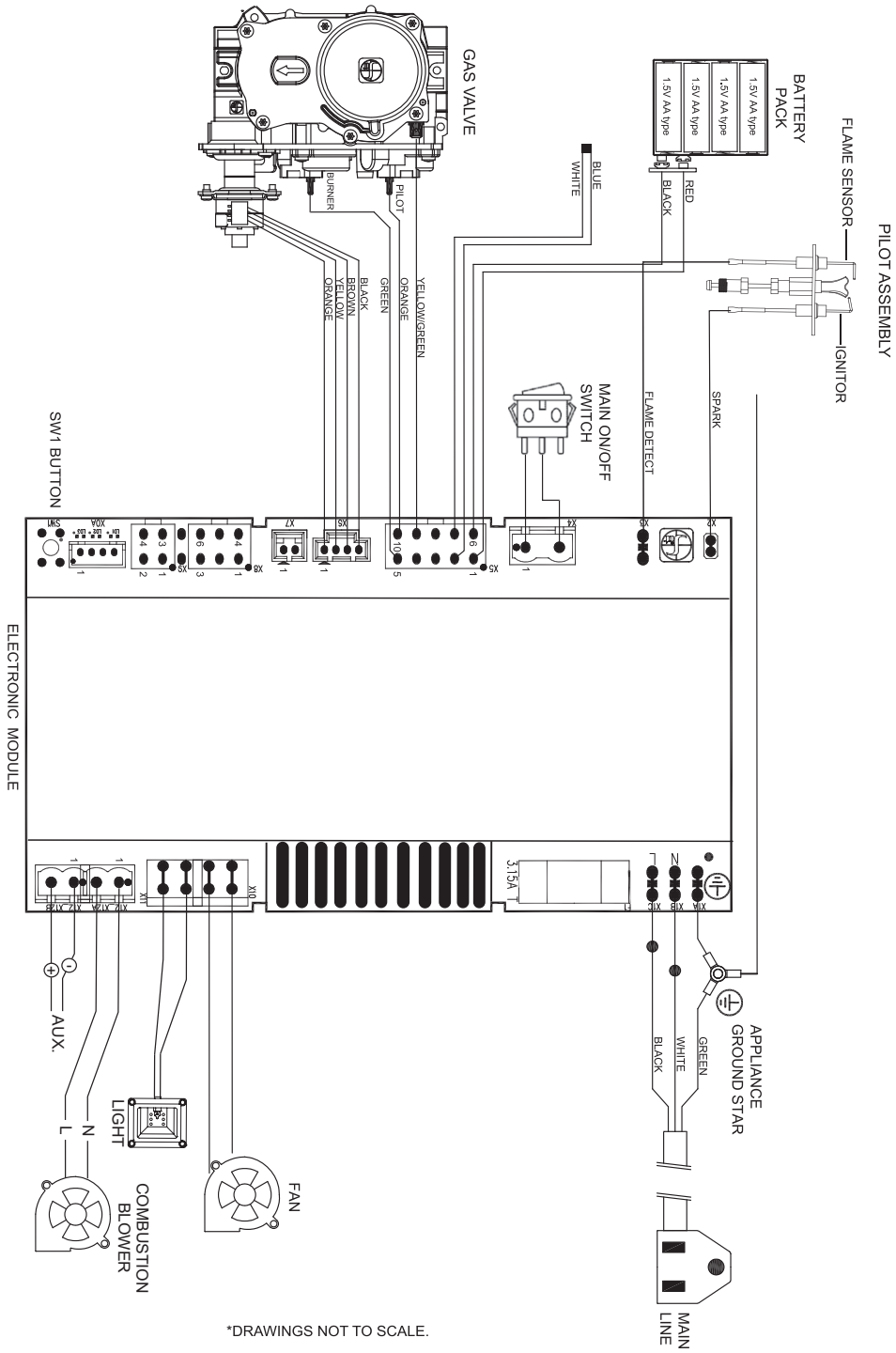

*DRAWINGS NOT TO SCALE.

If any of the original wire as supplied with this unit must be replaced, it must be replaced with equivalent gauge and temperature rated wire.

This appliance is only for use with the type of gas indicated on the rating plate and may be installed in an aftermarket, permanently located, manufactured (mobile) home where not prohibited by local codes. This appliance is not convertible for use with other gases, unless a certified kit is used.

⚠ CAUTION

Do not operate the appliance with glass panel removed, cracked or broken. Replacement of the panel should be done by a licensed or qualified service person.

⚠ WARNING

Improper installation, adjustment, alteration, service or maintenance can cause property damage, personal injury or loss of life. Installation and service must be performed by a qualified installer, service agency or the gas supplier.

REMOTE CONTROL SYSTEM - LIGHTING INSTRUCTIONS

FOR YOUR SAFETY READ BEFORE LIGHTING

⚠ WARNING

If you do not follow these instructions exactly, a fire or explosion may result causing property damage, personal injury or loss of life.

A. This appliance is equipped with an ignition device which automatically lights the pilot. Do not try to light the pilot by hand, use the remote control. Before lighting the pilot, ensure that the main on/off switch is on. When lighting the pilot, follow these instructions exactly.

B. Before lighting smell all around the appliance area for gas. Be sure to smell next to the floor because some gas is heavier than air and will settle on the floor.

What To Do If You Smell Gas
- Do not try to light any appliance.
- Do not touch any electrical switch;
- Do not use any phone in your building.
- Immediately call your gas supplier from a neighbor's phone. Follow the gas supplier's instructions.
- If you cannot reach your gas supplier, call the fire department.

C. Use only the remote control to operate the gas valve. Never use tools. If valve does not operate, don't try to repair it, call a qualified service technician. Force or attempted repair may result in a fire or explosion.

D. Do not use this appliance if any part has been under water. Immediately call a qualified service technician to inspect the appliance and to replace any part of the control system and any gas control which has been under water.

LIGHTING INSTRUCTIONS

1. STOP! Read the safety information above.
2. Turn OFF electric power to the appliance.
3. Remove front surround assemblies.
4. Turn gas shut-off counterclockwise ↺ to "ON" position.
5. Wait ten minutes to clear out any gas. Then smell for gas, including near the floor. If you smell gas, STOP! Follow "B" in the safety information above. If you do not smell gas, go to the next step.
6. Tun ON electric power to the appliance.
7. Find pilot. The pilot is behind the burner.
8. Do not try to light the pilot by hand. Turn main flame to ON using your remote. If the pilot does not light within 60 seconds, stop and go to step 5.
9. If the burner or pilot does not operate properly after several tries, turn the gas shut-off clockwise ↻ to "OFF" and call your service technician or gas supplier.
10. Replace the front surround assemblies.
11. Operation of the gas valve is controlled by a hand held remote control. Refer to remote instructions for detailed operation information.

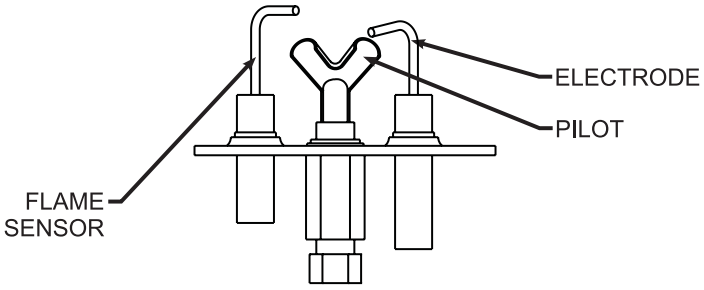

GAS SHUT-OFF VALVE

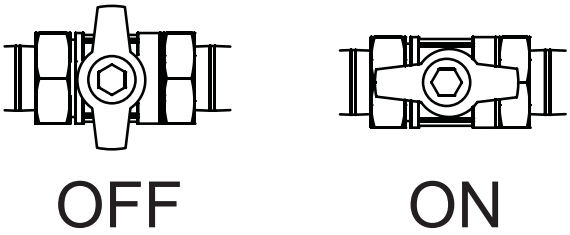

TO TURN OFF GAS TO FIREPLACE

1. Turn off all electric power to the appliance if service is to be performed.
2. Gain access to the control compartment by removing surround assemblies.
3. Locate On/Off gas shut-off and turn clockwise ↻ to "OFF". Do not force.
4. Replace surround assemblies removed in step 2.

REMOTE CONTROL SYSTEM - TROUBLESHOOTING

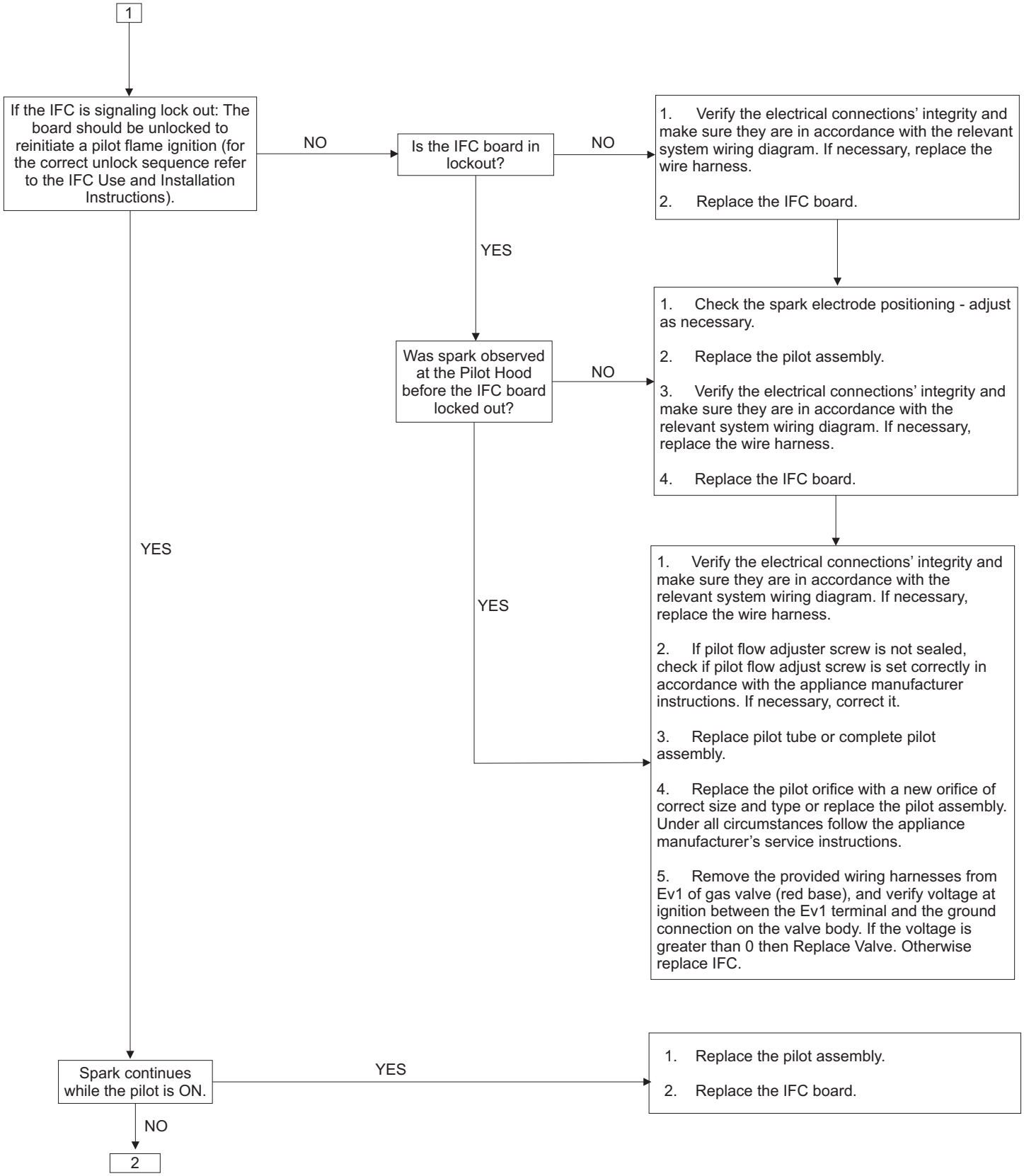

REMOTE CONTROL SYSTEM - TROUBLESHOOTING (CONT'D)

2

Main burner lights when the pilot only should light.

YES →

1. Replace IFC board.
2. Replace the gas valve.

NO ↓

Pilot holds the flame?

NO →

1. Verify the pilot flame fully engulfs the tip of the sense electrode. If not, replace the pilot assembly.
2. Replace the pilot assembly.
3. Carefully clean the electrical connections of the sense cable and the IFC board sense cable connection.
4. Replace the sense cable, the cable-sense electrode assembly, or the pilot assembly.
5. Verify the pilot is properly grounded.
6. Replace the pilot orifice with a new orifice of correct size and type or replace the pilot assembly.
7. If pilot flow adjuster screw is not sealed, correct it.

YES ↓

Main burner ignites?

NO →

1. Verify the electrical connections' integrity and make sure they are in accordance with the relevant system wiring diagram. If necessary, replace the wire harness.
2. Check if the optional remote transmitter is in "thermostat" or "on" mode and verify there is a call for heat (if using a thermostat remote). Adjust the setting for heat.
3. Verify that the pilot hood is properly fitted and a pilot flame is directed to properly ignite the main appliance burner.
4. Replace the main burner orifice with a new orifice of correct size and type or replace the pilot assembly. Under all circumstances, follow the service instructions.
5. Remove the provided wiring harnesses from EV2 of gas valve (red base) and verify voltage at ignition between the EV1 terminal and the ground connection on the valve body.
   5.1 If the voltage is greater than 0, then replace valve.
   5.2 Or Replace IFC.
6. Check the pressure at the outlet pressure test point out according to the manufacturer's instruction. If not in accordance, replace the gas valve.

YES ↓

Main burner remains ON?

NO →

1. Verify the electrical connections' integrity and make sure they are in accordance with the relevant system wiring diagram. If necessary, replace the wire harness.
2. Check the pressure at the outlet pressure test point out according the manufacturer's instruction. If not in accordance, replace the gas valve.
3. With the system in the OFF position, connect the voltmeter between the EV2 terminal (green base) on the valve and the ground on the valve body.
   Turn the system ON, let pilot light, and observe the following voltage sequence: once the pilot flame is proved, the voltage on EV2 should spike to approx. 5 VdC for approx. 2 sec and then drop to approx. 0.6 VdC continuously.
   3.1 If the sequence is followed, replace the gas valve.
   3.2 If the sequence is not followed, replace the IFC board.

↓

Main burner modulates properly?

→

1. Replace the main burner orifice with a new orifice of correct size (partial blockage possible). Verify that the main burner flame modulates. If it does not modulate, replace the gas valve.
2. Verify that the gas valve outlet pressure limits are in accordance with the manufacturer specifications. If not, replace the gas valve.

MAINTENANCE AND SERVICE

HOMEOWNER

Annual Inspection

- Have the fireplace inspected annually before use.
- More frequent inspection and cleaning may be required if the fireplace is installed in an area exposed to pet hair or dust, or to excessive lint from new carpeting or bedding materials.

During The Annual Checkup, The Technician Will:

- Inspect the pilot (flame safety system) and burner(s) for proper operation and replace any damaged parts.
- Check the glass and gasket for proper seal.
- Vacuum and clean any foreign debris in the firebox that is not supposed to be there.
- Clean Glass with a suitable fireplace glass cleaner. Abrasive cleaners must not be used. Be careful not to scratch the glass when cleaning.
- Check the barrier screen for fit and structural integrity. **See Pages 82 and 83.**
- Check all latches or other door retention components for proper operation, tension, and relief mechanisms are free from obstructions. **See Pages 82 and 83.**
- Inspect the log set (if applicable) and decorative media (if applicable) for debris or damage.
- Freshen up the glowing embers if applicable.
- Replace batteries in the remote transmitter and receiver if applicable.
- Inspect the venting and vent termination cap for damage, corrosion, sooting, or obstruction and correct if present.
- *In addition, clean and inspect the fireplace following any remodeling work in your home.*

INSTALLER

Annual Inspection

- Have the fireplace inspected annually before use.
- More frequent inspection and cleaning may be required if the fireplace is installed in an area exposed to pet hair or dust, or to excessive lint from new carpeting or bedding materials.

During The Annual Checkup, The Technician Will:

- Inspect the pilot (flame safety system) and burner(s) for proper operation and replace any damaged parts.
- Test and measure the flame failure response time of the flame safety system. It must de-energize the safety shut-off in no more than 30 seconds.
- Vacuum and clean any foreign debris in the firebox that is not supposed to be there.
- Inspect and ensure that the lighting of the main burner occurs within 4 seconds of the gas valve opening. Visual inspection should match the information illustrated in the manual. Inspect primary air openings for blockage.
- Check the glass and gasket for proper seal.
- Clean Glass with a suitable fireplace glass cleaner. Abrasive cleaners must not be used. Be careful not to scratch the glass when cleaning.
- Check all latches or other door retention components for proper operation, tension, and relief mechanisms are free from obstructions. **See Pages 82 and 83.**
- Check the barrier screen for fit and structural integrity. **See Pages 82 and 83.**
- Inspect the log set (if applicable) and decorative media (if applicable) for debris or damage.
- Freshen up the glowing embers if applicable.
- Replace batteries in the remote transmitter and receiver if applicable.
- Inspect the venting and vent termination cap for damage, corrosion, sooting, or obstruction and correct if present.
- Check all accessible gas-carrying tubes, connections, pipes and other components for leaks.
- *In addition, clean and inspect the fireplace following any remodeling work in your home.*

1. Remove top and bottom louvers by lifting up and pulling them out. **See Figure 91.**

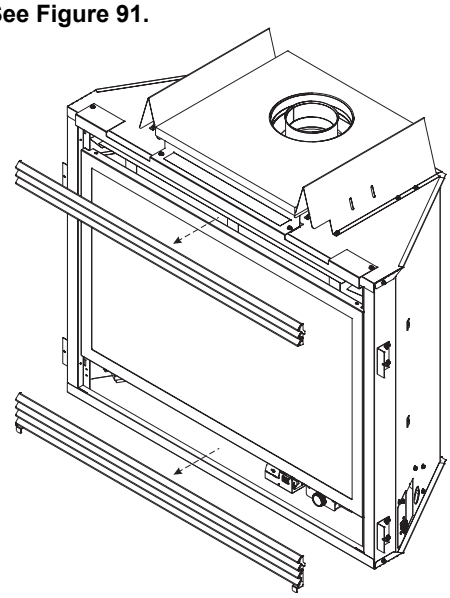

Figure 91

2. Disengage the two glass latches. Pull out and down on latch and then release. **See Figure 92.**

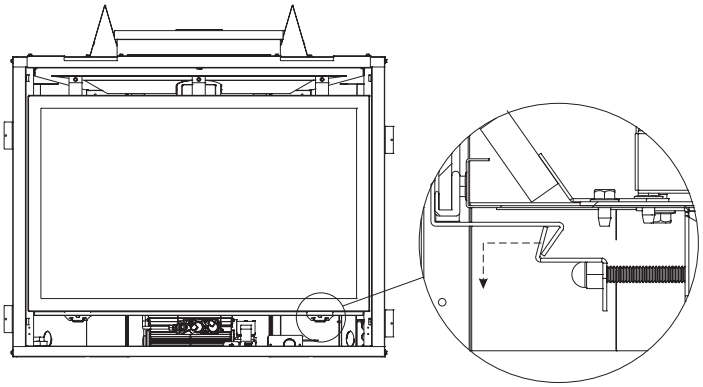

Figure 92

3. Angle barrier screen frame so the barrier screen bracket rests over the glass frame. **See Figure 93.**

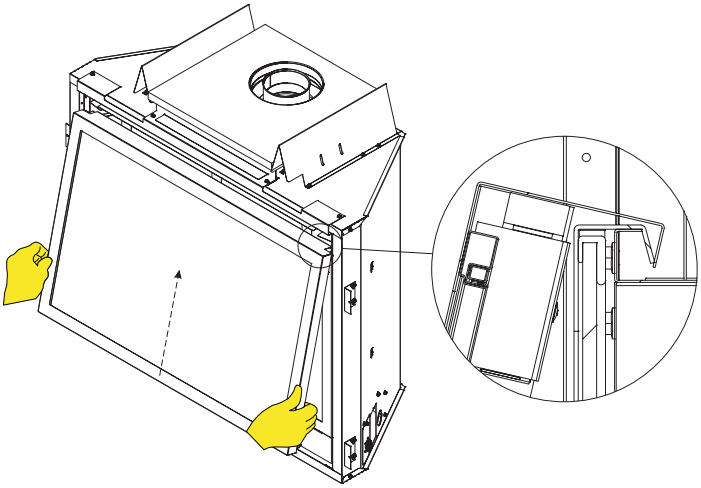

Figure 93

4. Engage the two glass latches over the barrier screen and glass frames as shown in **Figure 94.**

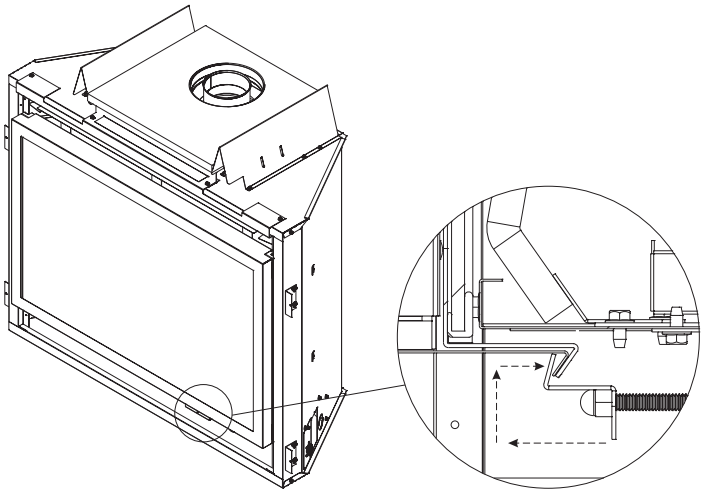

Figure 94

NOTICE

It is normal for appliances fabricated of steel to give off some expansion and/or contraction noise during the start up or cool down cycle. Similar noises are found with your furnace heat exchanger or car engine.

It is not unusual for your gas fireplace to give off some odor the first time it is burned. This is due to the curing of the paint and any undetected oil from the manufacturing process.
Please ensure that your room is well ventilated - open all windows.
It is recommended that you burn your fireplace for at least six hours the first time you use it. Place fan in the "OFF" position during this time.

IMPORTANT: Turn off gas before servicing appliance. It is recommended that a qualified service person perform these check-ups at the beginning of each heating season.

- **Clean Burner and Control Compartment**
  Keep the control compartment, logs, and burner areas surrounding the logs clean by vacuuming or brushing at least twice a year.
  Cleaning Procedure

1. Turn off pilot light at gas valve.
2. Remove glass front. (See Glass Removal)
3. Vacuum burner compartment.
4. Reinstall glass front.
5. Ignite pilot. (See Lighting Instructions)
6. Operate the pilot burner. If it appears abnormal call a service person.

- **Check Vent System**
  The appliance and venting system should be inspected before initial use and at least annually by a qualified service person. Inspect the external vent cap on a regular basis to make sure that no debris is interfering with the air flow.

Reassembly and Resealing Gas Accumulation Relief System Glass Frame Assembly and Combustion Chamber

Whenever the glass frame assembly is pivoted open by a delayed ignition in the main burner, the glass frame assembly gaskets and combustion chamber must be examined by a qualified service person for damage. All damaged gaskets on the glass frame assembly and combustion chamber must be replaced by a qualified service person. If damage occurs to the combustion chamber, it must be replaced by a qualified service person. Contact Empire Comfort Systems, Inc. for replacement parts.

Glass Cleaning

It will be necessary to clean the glass periodically. During start-up condensation, which is normal, forms on the inside of the glass and causes lint, dust and other airborne particles to cling to the glass surface. Also initial paint curing may deposit a slight film on the glass. It is therefore recommended that the glass be cleaned two or three times with a non-abrasive household cleaner and warm water (we recommend gas fireplace glass cleaner). After that the glass should be cleaned two or three times during each heating season depending on the circumstances present.

General Glass Information

⚠ WARNING

Do not operate appliance with the glass front removed, cracked or broken. Replacement of the glass should be done by a licensed or qualified service person.

Only glass approved for use by the manufacturer in fireplace may be used for replacement. The glass replacement should be done by a licensed or qualified service person.

⚠ WARNING

1. **The use of substitute glass will void all product warranties.**
2. **Care must be taken to avoid breakage of the glass.**
3. **Under no circumstances should this appliance be operated without the glass front or with a broken glass front. Replacement of the glass (with gasket) as supplied by the manufacturer should be done by a qualified service person.**
4. **Do not abuse the glass by striking or hitting the glass.**

⚠ WARNING

Do not use abrasive cleaners on glass. Do not attempt to clean glass when glass is hot.

Glass Door Removal

1. Remove the top louver by grasping the louver, then lift upward and pull forward.
2. Remove the bottom louver by lifting up and pulling forward.
3. Locate the bottom two glass frame spring clamps. Pull forward and down to release them from the Glass Door frame.
4. Remove the Glass Door by pulling the bottom of the door outward several inches, then lift upwards to disengage it from the firebox upper flange.

Glass Door Installation

1. When installing the Glass Door assembly, make sure that the door top flange is hooked over the firebox top flange as illustrated in the "Correct" view in **Figure 90.**
   Important: Do not allow the gasket across the top of the door to roll up on top of the firebox flange as shown in "Incorrect" view in Figure 90.
2. To install correctly, the door should be held at an angle outward from the firebox as shown in the illustration, then carefully engage the upper flange of the door frame with the top flange of the firebox. Center the door left to right, then allow the bottom of the door to swing inward to seal against the firebox front.
3. Once the glass door is placed flat to the firebox front edges, engage the two spring latches to the bottom flange on the glass door frame to secure the door assembly.
4. Replace the top and bottom louvers.

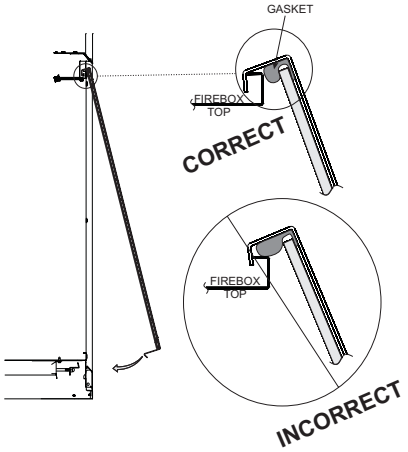

Figure 90

Louver Removal and Installation

1. Remove top louver, grasp louver and pull forward.
2. Lower bottom louver.
3. Align clips on top louver with slots on front posts. Replace top louver into fireplace.
4. Close bottom louver.

PARTS LIST - DVX36FP(3,7,9)

INDEX NO.	PART NUMBER			DESCRIPTION
	DVX36FP3	DVX36FP7	DVX36FP9	
1	R9347	R9347	R9347	Insulation, Top Shield
2	23437	23437	23437	Top Shield
3	23219	23219	23219	Top Standoff (Qty. 2)
4	R7566	R7566	R7566	Vent Adapter
5	R7573	R7573	R7573	Inlet Vent Gasket
6	10554	10554	10554	Nailing Flange (Qty. 4)
7	23374	23374	23374	Flue Baffle
8	16223	16223	16223	Spring Retainer Assembly
9	17162	17162	17162	Junction Box Assembly
10	R3492	R3492	R3492	3-Prong Receptacle
11	17357	17357	17357	Heat Shield (Junction Box)
12	23116	23116	23116	Accent Lamp Cover
13	R11117	R11117	R11117	Accent Lamp
14	R9341	R9341	R9341	Accent Lamp Glass
15	R9658	R9658	R9658	Accent Lamp Gasket
16	R9342	R9342	R9342	Accent Lamp Bezel
17	R9390	R9390	R9390	Accent Lamp Wire Harness
19	R9942	R9377	R12256	Wire Assembly
20	10088	10088	N/A	Rheostat Bracket
21	18879	18879	N/A	Rheostat
22	R6159	R6159	N/A	3-Prong Plug
23	R9234	R9234	R9234	Banded Brick Liner - Left
24	R9235	R9235	R9235	Banded Brick Liner - Back
25	R9236	R9236	R9236	Banded Brick Liner - Right
26	18807	18807	18807	Louver Assembly - Upper
27	23088	23088	23088	Ceramic Glass Door Assembly
28	18808	18808	18808	Louver Assembly - Lower
29	R7611	R10424	R10424	Pilot Assembly (Propane Gas)
29	R7612	R10423	R10423	Pilot Assembly (Natural Gas)
30	R7617	R9189	R9189	Pilot Gasket
31	23085	23085	23085	Burner Assembly
32	11499	11499	11499	Burner Support - Left
33	11377	11377	11377	Burner Support - Right
34	R5676	R5676	R5676	Air Shutter
35	P250	P250	P250	Orifice (Propane Gas)
35	P211	P211	P211	Orifice (Natural Gas)
36	P200	P200	P200	Orifice Fitting
37	11269	11269	11269	Gas Line Fitting
38	17369	31458	31458	Tubing Assembly
39	R2423	R2423	R2423	5/16" Male Connector

Use Only Manufacturer's Replacement Parts. Use of Any Other Parts Could Cause Injury Or Death.

PARTS LIST - DVX36FP(3,7,9)

INDEX NO.	PART NUMBER			DESCRIPTION
	DVX36FP3	DVX36FP7	DVX36FP9	
40	R7578	R11126	R11234	Gas Valve (Propane Gas)
40	R7577	R11125	R11233	Gas Valve (Natural Gas)
41	17161	24900	24900	Gas Valve Bracket
42	23502	23502	23502	Grate Assembly (Qty. 2)
43	23070	23070	23070	Burner Base / Log Shelf
44	R10947	R11123	R11524	Wire Assembly
45	R5668	R11333	-	Ignitor Wire
46	R3436	R2522	R2522	Remote/On/Off Switch
47	R2708	-	-	Piezo Ignitor
48	-	-	18858	Blower Base
49	FBB4	FBB4	39370	Blower Assembly
50	-	-	18880	Blower Shield
51	-	-	*R11532	Switch Terminal Black
52	R7649	R7649	-	Fan Control Switch
53	23501	23501	23501	Blower Heat Shield
54	23694	23694	23694	Air Shutter Shield
55	-	29382	35154	Module Tray
57	-	-	R7615	Cord Set
58	-	R11034	R11034	Wire Harness
59	-	R11127	R12383	Control Module
60	-	R11128	-	AC Adapter
61	-	R11122	R11122	Battery Back-up
71	-	R2667	R11516	Wire Harness
73	-	R11332	-	Sensor Wire
74	-	31500	31500	Pilot Shield
75	-	-	R11522	Remote Control, RF
N/S	18704	18704	18704	Decorative Rock (1 lb)
N/S	15999	15999	15999	Rockwool (0.1 oz)

N/S - Not Shown
Not included with Control Module. Save if ordering replacement module.
*Requires minimum rate screw be ordered.
See page 59 for log part numbers.

Use Only Manufacturer's Replacement Parts. Use of Any Other Parts Could Cause Injury Or Death.

PARTS LIST - DVX42FP(3,7,9)

INDEX NO.	PART NUMBER			DESCRIPTION
	DVX42FP3	DVX42FP7	DVX42FP9	
1	R9348	R9348	R9348	Insulation, Top Shield
2	23437	23437	23437	Top Shield
3	23219	23219	23219	Top Standoff (Qty. 2)
4	R7567	R7567	R7567	Vent Adapter
5	R7573	R7573	R7573	Vent Gasket
6	10554	10554	10554	Nailing Flange (Qty. 4)
7	23359	23359	23359	Flue Baffle
8	16223	16223	16223	Spring Retainer Assembly
9	17162	17162	17162	Junction Box Assembly
10	R3492	R3492	R3492	3-Prong Receptacle
11	17357	17357	17357	Heat Shield (Junction Box)
12	23116	23116	23116	Accent Lamp Cover
13	R11117	R11117	R11117	Accent Lamp
14	R9341	R9341	R9341	Accent Lamp Glass
15	R9658	R9658	R9343	Accent Lamp Gasket
16	R9342	R9342	R9342	Accent Lamp Bezel
17	R9390	R9390	R9390	Accent Lamp Wire Harness
19	R9377	R9377	R12256	Wire Assembly
20	10088	10088	N/A	Rheostat Bracket
21	18879	18879	N/A	Rheostat
22	R6159	R6159	N/A	3-Prong Plug
26	17187	17187	17187	Louver Assembly - Upper
27	23089	23089	23089	Ceramic Glass Door Assembly
28	17188	17188	17188	Louver Assembly - Lower
29	R7611	R10424	R10424	Pilot Assembly (Propane Gas)
29	R7612	R10423	R10423	Pilot Assembly (Natural Gas)
30	R7617	R9189	R9189	Pilot Gasket
31	23085	23085	23085	Burner Assembly
32	11499	11499	11499	Burner Support - Left
33	11377	11377	11377	Burner Support - Right
34	R5676	R5676	R5676	Air Shutter
35	P245	P245	P245	Orifice (Propane Gas)
35	P209	P209	P209	Orifice (Natural Gas)
36	P200	P200	P200	Orifice Fitting
37	11269	11269	11269	Gas Line Fitting
38	17369	31458	31458	Tubing Assembly
39	R2423	R2423	R2423	5/16" Male Connector
40	R7578	R11126	R11234	Gas Valve (Propane Gas)
40	R7577	R11125	R11233	Gas Valve (Natural Gas)
41	17161	29400	29400	Gas Valve Bracket

Use Only Manufacturer's Replacement Parts. Use of Any Other Parts Could Cause Injury Or Death.

PARTS LIST - DVX42FP(3,5,7,9)

INDEX NO.	PART NUMBER			DESCRIPTION
	DVX42FP3	DVX42FP7	DVX42FP9	
42	23502	23502	23502	Grate Assembly (Qty. 2)
43	23070	23070	23070	Burner Base / Log Shelf
44	R10947	R11123	R11524	Wire Assembly
45	R5668	R11333	-	Ignitor Wire
46	R3436	R2522	R2522	Remote/On/Off Switch
47	R2708	-	-	Piezo Ignitor
48	-	-	18858	Blower Base
49	FBB4	FBB4	39370	Blower Assembly
50	-	-	18880	Blower Shield
51	-	-	*R11532	Switch Terminal Black
52	R7649	R7649	-	Fan Control Switch
53	23501	23501	23501	Blower Heat Shield
54	23694	23694	23694	Air Shutter Shield
55	-	29382	35154	Module Tray
57	-	-	R7615	Cord Set
58	-	R11034	R11034	Wire Harness
59	-	R11127	R12383	Control Module
60	-	R11128	-	AC Adapter
61	-	R11122	R11122	Battery Back-up
71	-	R2667	R11516	Wire Harness
73	-	R11332	-	Sensor Wire
74	-	31500	31500	Pilot Shield
75	-	-	R11522	Remote Control
N/S	18704	18704	18704	Decorative Rock (1 lb)
N/S	15999	15999	15999	Rockwool (0.1 oz)

N/S - Not Shown
Not included with Control Module. Save if ordering replacement module.
*Requires minimum rate screw to be ordered.
See page 59 for log part numbers.

Use Only Manufacturer's Replacement Parts. Use of Any Other Parts Could Cause Injury Or Death.

PARTS VIEW

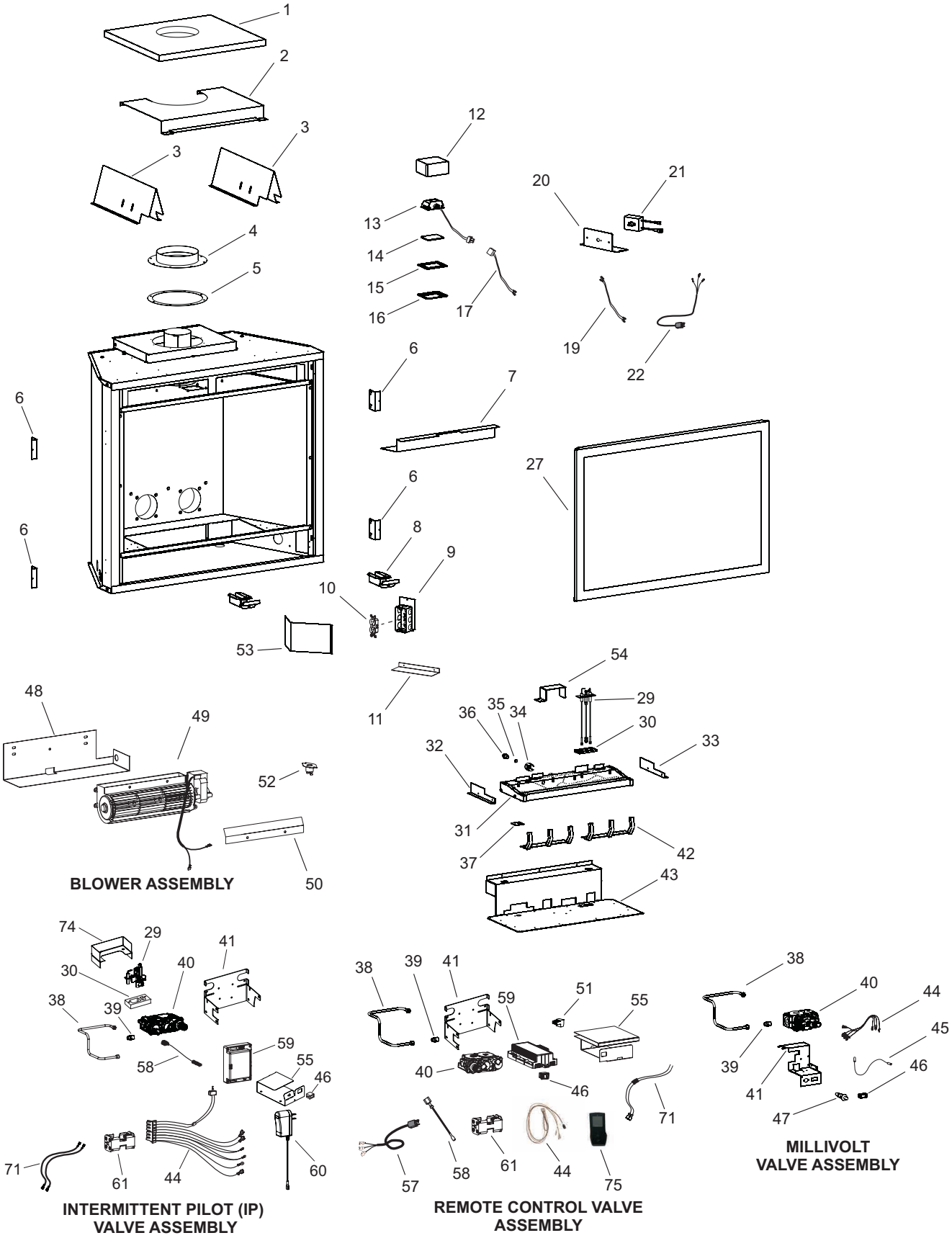
BLOWER ASSEMBLY
INTERMITTENT PILOT (IP) VALVE ASSEMBLY
REMOTE CONTROL VALVE ASSEMBLY
MILLIVOLT VALVE ASSEMBLY

MASTER PARTS DISTRIBUTOR LIST

To Order Parts Under Warranty, please contact your local Empire dealer. See the dealer locator at www.empirecomfort.com. To provide warranty service, your dealer will need your name and address, purchase date and serial number, and the nature of the problem with the unit.

To Order Parts After the Warranty Period, please contact your dealer or one of the Master Parts Distributors listed below. This list changes from time to time. For the current list, please click on the Master Parts button at www.empirecomfort.com. Please note: Master Parts Distributors are independent businesses that stock the most commonly ordered Original Equipment repair parts for Heaters, Grills, and Fireplaces manufactured by Empire Comfort Systems Inc.

Dey Distributing
1401 Willow Lake Boulevard
Vadnais Heights, MN 55101

Phone: 651-490-9191
Toll Free: 800-397-1339
Website: www.deydistributing.com
Parts: Heater, Hearth and Grills

F. W. Webb Company
200 Locust Street
Hartford, CT 06114

Phone: 860-722-2433
Toll Free: 800-243-9360
Fax: 860-293-0479
Toll Free Fax: 800-274-2004
Websites: www.fwwebb.com & www.victormfg.com
Parts: Heater, Hearth and Grills

East Coast Energy Products
10 East Route 36
West Long Branch, NJ 07764

Phone: 732-870-8809
Toll Free: 800-755-8809
Fax: 732-870-8811
Website: www.eastcoastenergy.com
Parts: Heater, Hearth and Grills

HOW TO ORDER REPAIR PARTS

Parts Not Under Warranty

Parts can be ordered through your Service Person, Dealer, or a Master Parts Distributor. See this page for the Master Parts Distributors list. For best results, the **service person or dealer** should order parts through the distributor. Parts can be shipped directly to the **service person/dealer**.

Warranty Parts

Warranty parts will need a proof of purchase and can be ordered by your Service Person or Dealer. Proof of purchase is **required** for warranty parts.

All parts listed in the Parts List have a Part Number. When ordering parts, first obtain the Model Number and Serial Number from the name plate on your equipment. Then determine the Part Number (**not** the Index Number) and the Description of each part from the following illustration and part list. Be sure to give all this information . . .

Appliance Model Number _____ Part Description _____

Appliance Serial Number _____ Part Number _____

Type of Gas (Propane or Natural) _____

Do not order bolts, screws, washers or nuts. They are standard hardware items and can be purchased at any local hardware store.

Shipments contingent upon strikes, fires and all causes beyond our control.

FBB4 OPTIONAL VARIABLE SPEED BLOWER INSTALLATION

Attention: Install blower assembly before connecting gas inlet supply line

NOTICE: Junction box on right side of fireplace must be pre-wired at time of fireplace installation for use with blower assembly. It is recommended that an ON/OFF wall switch be installed that will activate the power supply to the furnace by a qualified electrician.

1. If installed, turn OFF gas supply to fireplace.
2. If applicable, turn OFF electric supply to fireplace.
3. Lower bottom louver on fireplace.
4. Refer to page 91, "Junction Box Wiring Installation Instructions" to complete wiring of junction box.

Attention: If installed, do not damage gas inlet supply line when blower assembly is inserted into fireplace. If necessary, remove gas inlet supply line.

5. Insert blower assembly into interior, bottom of fireplace. Position blower assembly behind gas valve, align notch on back of blower assembly with center screw on fireplace back and push blower assembly against fireplace back. The magnets on the back and bottom of blower assembly will sufficiently hold blower assembly in place.
6. Position speed control box to the right of gas valve. Attach speed control box to bottom of fireplace. The magnets on bottom of speed control box will sufficiently hold speed control box in place.
7. With base (flush face) of fan control switch facing upward, insert base of fan control switch under the mounting tabs on valve bracket. The base (flush face) of fan control switch must be in contact with bottom of firebox.
8. Insert power cord plug into junction box.
9. Close bottom louver on fireplace.
10. Installation of FBB4 optional variable speed blower assembly is completed.

Wiring

The appliance, when installed, must be electrically grounded in accordance with local codes or, in the absence of local codes, with the *National Electrical Code, ANSI/NFPA 70*, if an external electrical source is utilized. **This appliance is equipped with a three-prong [grounding] plug for your protection against shock hazard and should be plugged directly into a properly grounded three-prong receptacle. Do not cut or remove the grounding prong from this plug.** For an ungrounded receptacle, an adapter, which has two prongs and a wire for grounding, can be purchased, plugged into the ungrounded receptacle and its wire connected to the receptacle mounting screw. With this wire completing the ground, the appliance cord plug can be plugged into the adapter and be electrically grounded.

⚠ CAUTION

Label all wires prior to disconnection when servicing controls. Wiring errors can cause improper and dangerous operation. Verify proper operation after servicing.

Blower Motor

The blower motor does not have oiling holes. Do not attempt to oil the blower motor.

Blower Wheels

The blower wheels will collect lint and could require periodic cleaning. If the air output decreases or the noise level increases, it indicates a dirty blower wheel. Remove fan and clean blower wheels.

⚠ WARNING

Unplugging of blower accessory will not stop the heater from cycling. To turn off gas to the heater (millivolt model): push in gas control knob slightly and turn clockwise to "OFF." Do not force. To turn off gas on direct ignition model, turn gas line valve to "OFF."

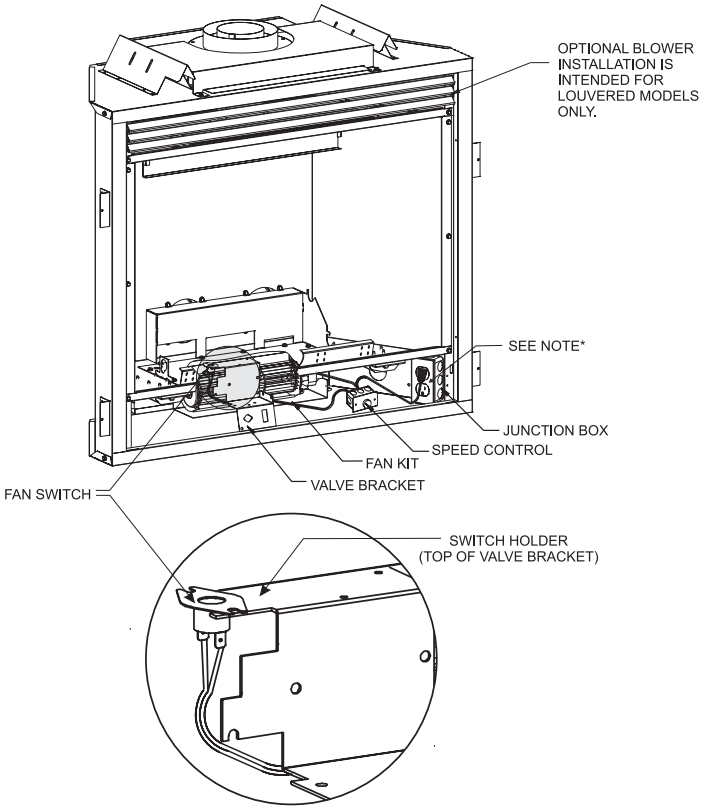

***NOTICE:** Refer to Junction Box wiring instructions on page 91 for proper operation.*

Figure 95

FBB4 OPTIONAL VARIABLE SPEED BLOWER INSTALLATION

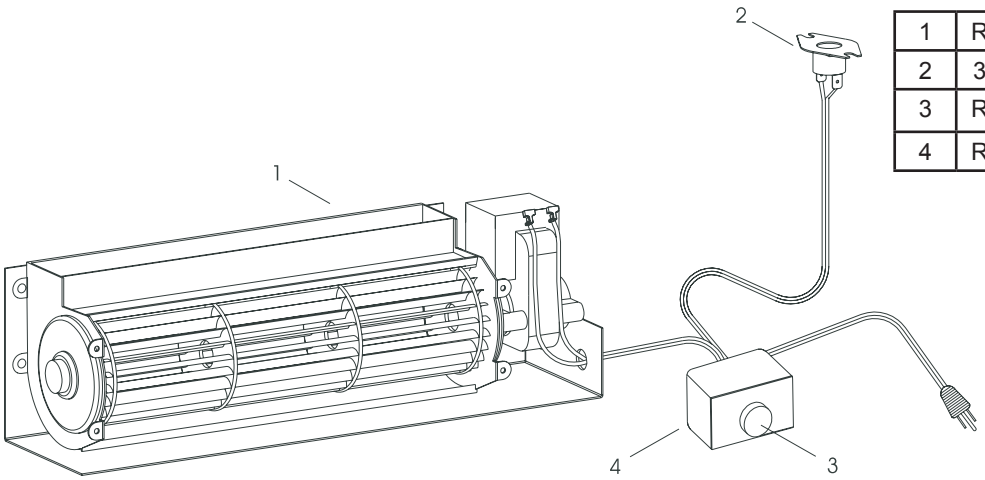

1	R7731	BLOWER MOTOR
2	31920	SWITCH ASSEMBLY
3	R4192	SPEED CONTROL KNOB
4	R4186	SPEED CONTROL

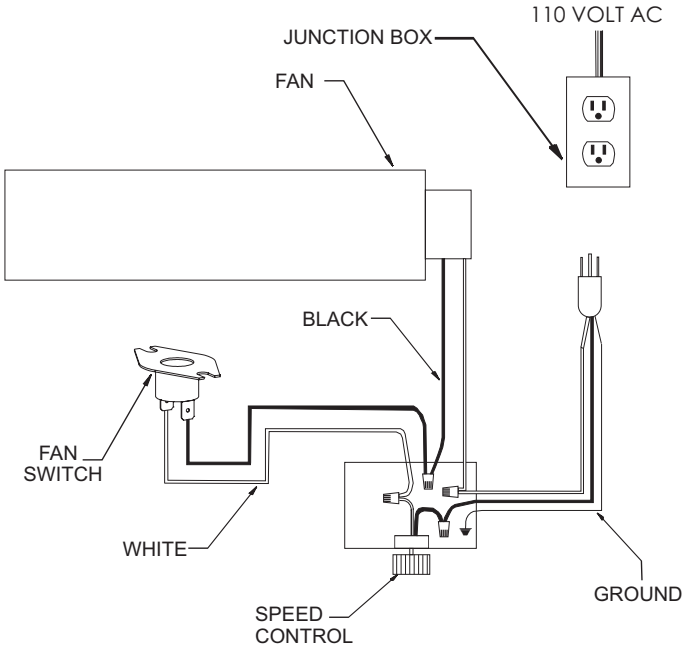

JUNCTION BOX WIRING INSTALLATION INSTRUCTIONS

⚠ CAUTION

All wiring should be done by a qualified electrician and shall be in compliance with all local, city and state building codes. Before making the electrical connection, make sure that main power supply is disconnected. The appliance, when installed, must be electrically grounded in accordance with local codes or, in the absence of local codes, with the national electrical code ansi/nfpa 70 (latest edition).

A factory installed junction box is located on the lower right side of the fireplace. Wiring must be fed to the junction box and attached to the receptacle that is provided. Leave approximately 6" of wire in the junction box for connection.

Attach black wire to one side of the receptacle and white wire to opposite side of receptacle. The ground wire should be attached to the green (ground) screw.

Install the receptacle into the junction box. Attach cover plate.

JUNCTION BOX CONNECTIONS

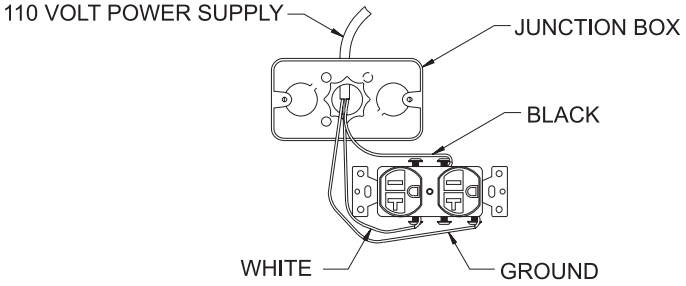

Figure 96

ACCENT LAMP

Your Luxury Direct Vent Gas Fireplace comes equipped with our "Accent Lamp." The light has been pre-wired and is controlled from the Rheostat.

If in the event the lamp or lens needs to be replaced, follow the instructions below:

1. Unplug the Accent Lamp from the junction box inside the fireplace.
2. Remove the four screws that secure the lens frame. This frame retains the glass lens. The bulb can now be accessed.

NOTE: Do not handle the lamp (bulb) with bare fingers, protect with clean dry cloth.

The lamp will pull straight out of the socket.

When re-installing, ensure integrity of gasket seal.

THE FIREBOX MUST BE SEALED.

Over-tightening the screws could break the lens.

"Light Leakage" from the upper area may be observed. The holes in the lamp housing are necessary for ventilation and must not be covered.

REPLACEMENT BULBS

Replacement bulbs are available locally at most hardware, appliance or building supply stores. Replace with a G9 (120V/25W) series halogen bulb.

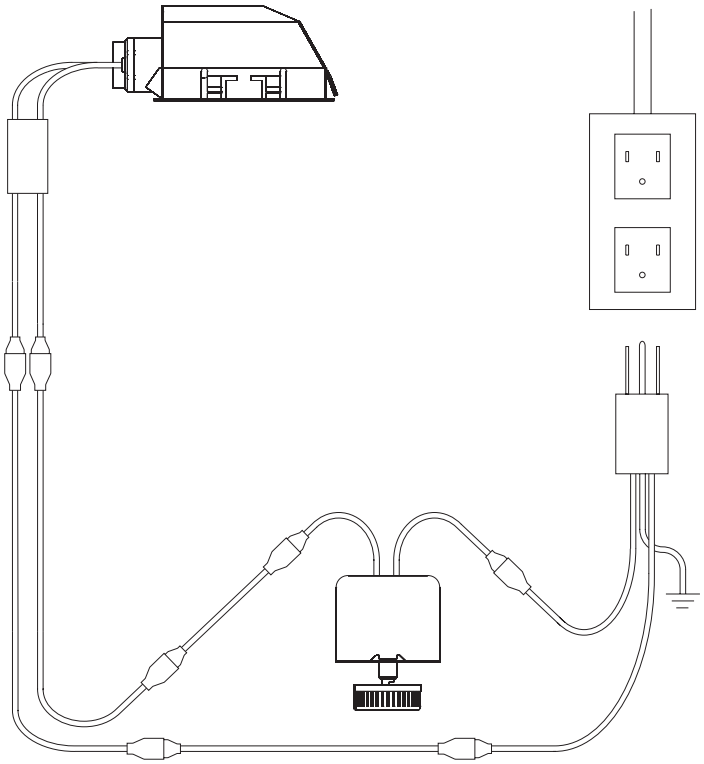

Figure 97 - Accent Lamp Wiring

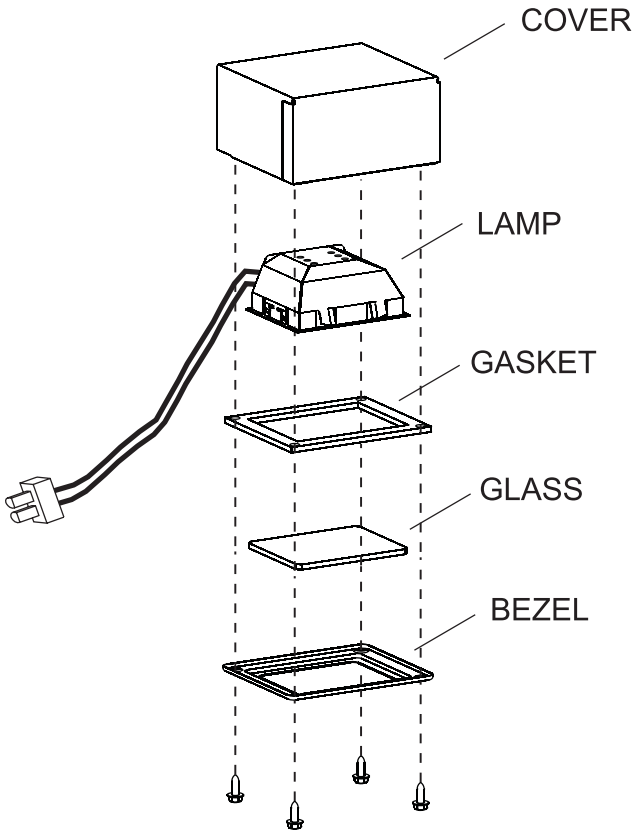

Figure 98 - Accent Lamp Parts

ACCESSORIES

The following accessory parts can be obtained from your Empire Comfort Systems dealer. If you need additional information beyond what your dealer can furnish, contact Empire Comfort Systems Inc., Nine Eighteen Freeburg Ave., Belleville, Illinois 62220-2623.

DECORATIVE ACCESSORIES
Decorative Louver Mission 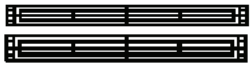
Decorative Louver Arch
Decorative Louver Leaf
Decorative Frame Rectangle with hinges
Decorative Door Plain Rectangle 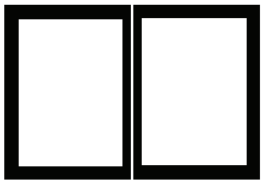

DECORATIVE ACCESSORIES
Window Trim 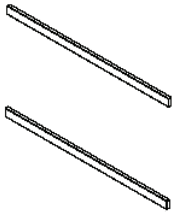
STD Louvers 45 Degree 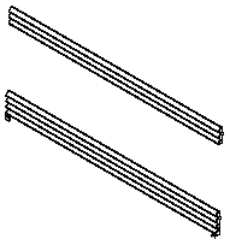
Outside Frame Kits 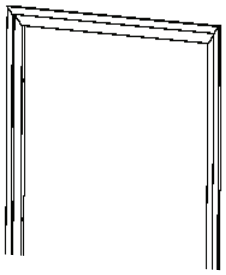

Empire Comfort Systems
918 Freeburg Avenue
Belleville, Illinois 62220-2623

Web Site www.empirecomfort.com

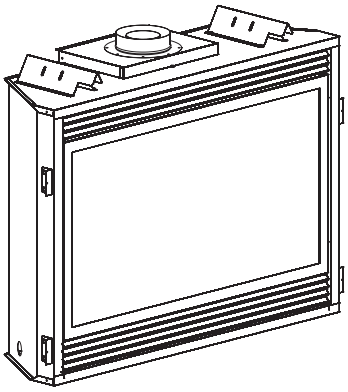

The Tahoe Direct Vent Zero Clearance Gas Fireplace Heater

MILLIVOLT STANDING PILOT: DVX(36,42)FP31L(N,P)-4
DIRECT IGNITION: DVX(36,42)FP51LN-2
INTERMITTENT PILOT: DVX(36,42)FP71L(N,P)-3
REMOTE RF MODELS: DVX(36,42)FP91(N,P)-2

GAS-FIRED C UL US LISTED

All Brick Liners are made from Ceramic Fiber for rich detail and lasting beauty. Banded Brick Liners have dark "cremed coffee" bricks with charcoal mortar in running bond courses, plus an accent band of diagonal bricks.

CLEARANCES TO COMBUSTIBLES

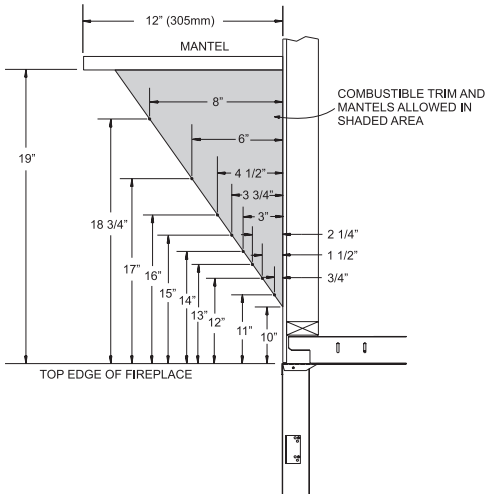

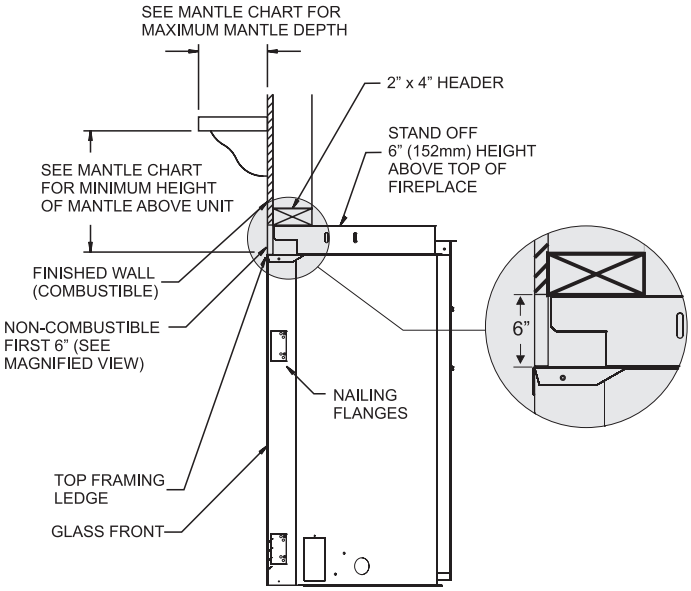

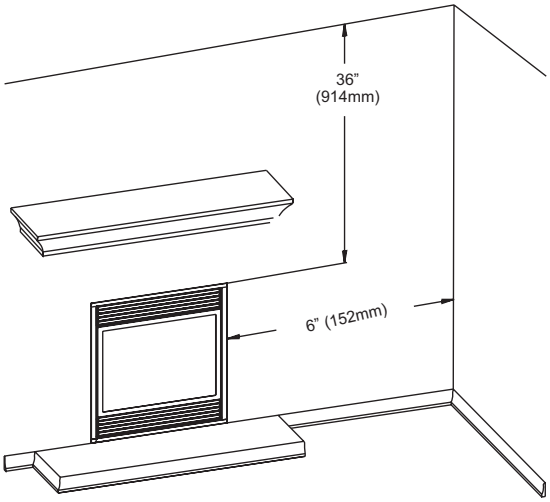

Clearance to Combustibles	
Back	0" (0 mm)
Side	0" (0 mm)
Floor	0" (0 mm)
Top Stand-off	0" (0 mm)
Top Framing Edge	6" (152 mm)

Empire Comfort Systems
918 Freeburg Avenue
Belleville, Illinois 62220-2623

Web Site www.empirecomfort.com

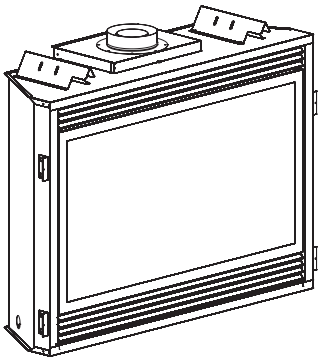

The Tahoe Direct Vent Zero Clearance Gas Fireplace Heater

MILLIVOLT STANDING PILOT: DVX(36,42)FP31L(N,P)-4
DIRECT IGNITION: DVX(36,42)FP51LN-2
INTERMITTENT PILOT: DVX(36,42)FP71L(N,P)-3
REMOTE RF MODELS: DVX(36,42)FP91(N,P)-2

GAS-FIRED C UL US LISTED

All Brick Liners are made from Ceramic Fiber for rich detail and lasting beauty. Banded Brick Liners have dark "cremed coffee" bricks with charcoal mortar in running bond courses, plus an accent band of diagonal bricks.

FIREBOX DIMENSIONS

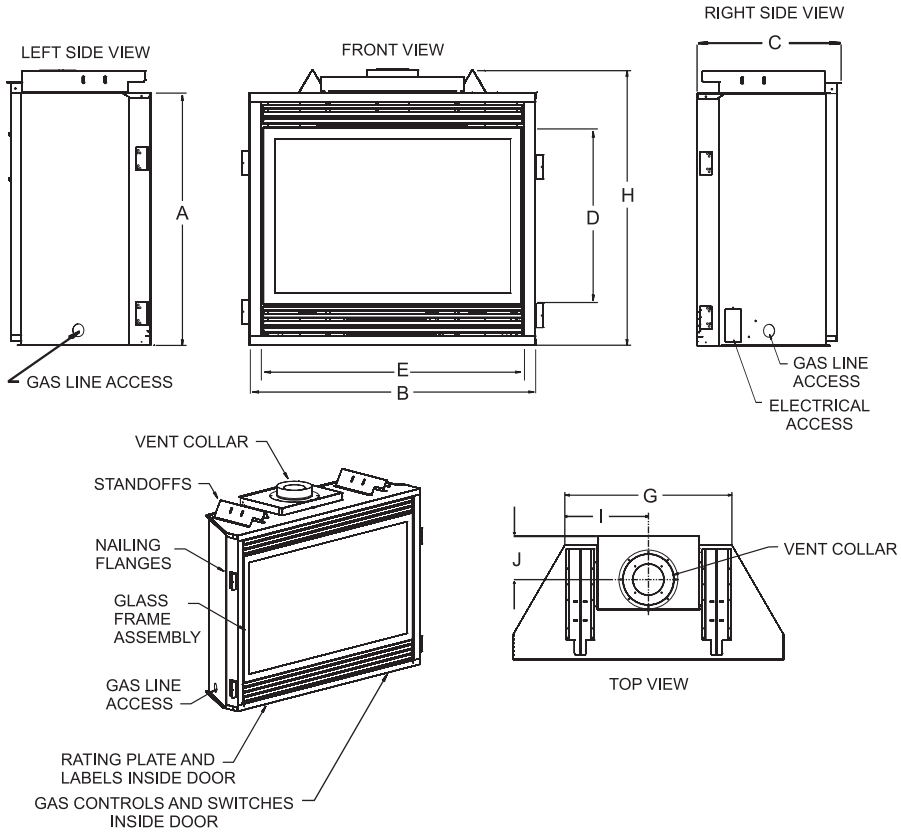

DVX Dimensions		
Dimension	DVX36FP	DVX42FP
A	34 3/4" 882.7mm	34 3/4" 882.7
B	39" 990.6mm	43" 1092.2mm
C	19 7/8" 505mm	19 7/8" 505mm
D	25" 635mm	25" 635mm
E	36" 914.4mm	40" 1016mm
G	26 1/2" 673.1mm	26 1/2" 673.1mm
H	40 3/4" 1035.1mm	40 3/4" 1035.1mm
I	13 1/4" 336.6mm	13 1/4" 336.6mm
J	7 1/8" 181mm	7 1/8" 181mm

FRAMING DIMENSIONS

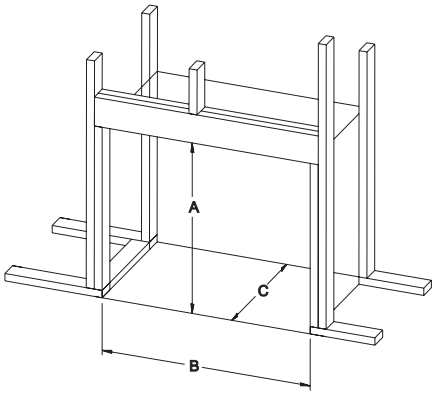

	DVX36	DVX42
"A"	40 7/8"	40 7/8"
"B"	39 3/8"	43 3/8"
"C"	19 7/8"	19 7/8"

WARRANTY

Empire Comfort Systems Inc. warranties this hearth product to be free from defects at the time of purchase and for the periods specified below. This warranty applies to the original purchaser only and is not transferable. All warranty repairs must be accomplished by a qualified gas appliance technician.

Limited Lifetime Parts Warranty – Factory-Installed Glass

If factory-installed glass fails because of defective workmanship or material, Empire will repair or replace it at Empire's option.

Limited Lifetime Parts Warranty – Combustion Chamber, Heat Exchanger

If the combustion chamber or heat exchanger (see parts list) fails because of defective workmanship or material, Empire will repair or replace it at Empire's option.

Limited Three-Year Parts Warranty – All Other Components (Except Remote Controls, Thermostats, Lights, Accessories and Replacement Parts)

Should any part fail because of defective workmanship or material within three years from the date of purchase, Empire will repair or replace it at Empire's option.

Limited One-Year Parts Warranty – Remote Controls, Thermostats, Lights, Accessories, and Replacement Parts

Should any remote control, thermostat, lighting system, accessory, or replacement part fail because of defective workmanship within one year from the date of purchase, Empire will repair or replace it at Empire's option.

Duties of the Owner

Have the appliance installed by a qualified installer, and operate and maintain it in accordance with the furnished instructions
Provide proof of purchase (receipt) to establish the purchase date, which determines the warranty start date.
Provide ready access to the appliance for service.

What Is Not Covered

Damage caused by misuse or improper installation.
Damage caused by improper maintenance or lack of maintenance.
Claims that do not involve defective workmanship or materials.
Unauthorized service or replacement parts.
Travel, diagnostic costs and freight charges on warranted parts to and from the factory.
Removal and reinstallation cost.

How to Get Service

Provide the dealer with the model number, serial number, type of gas, and proof of purchase. The installing dealer is responsible for providing service and will contact the factory to initiate any warranted parts replacements. Empire will make replacement parts available at the factory. Shipping expenses are not covered.
If, after contacting your Empire dealer, the service received has not been satisfactory, send an e-mail describing the issue and any actions taken to info@empirecomfort.com with "Consumer Relations" in the subject line.

Your Rights under State Law

This warranty gives you specific legal rights, and you may also have other rights, which vary from state to state.

EMPIRE
COMFORT SYSTEMS
SINCE 1932

Empire Comfort Systems Inc.
Belleville, IL

If you have a general question about our products, please e-mail us at info@empirecomfort.com.

If you have a service or repair question, please contact your dealer.

www.empirecomfort.com