This Owner's Manual is provided and hosted by Appliance Factory Parts.

Appliance Factory Parts
Experts in BBQ, Humidifier, & Appliance Parts
1-800-955-7075

Broilmaster PC Owner's Manual

Shop genuine replacement parts for Broilmaster PC

Find Your Broilmaster Grill Parts - Select From 310 Models

-------- Manual continues below --------

BROILMASTER®
PREMIUM GAS GRILLS

Cart, Post, and Base Owner's Manual

DC, PC, PB, U26, U26SS, U48, and P48 Models

Outdoor Grill Mountings for Propane and Natural Gas

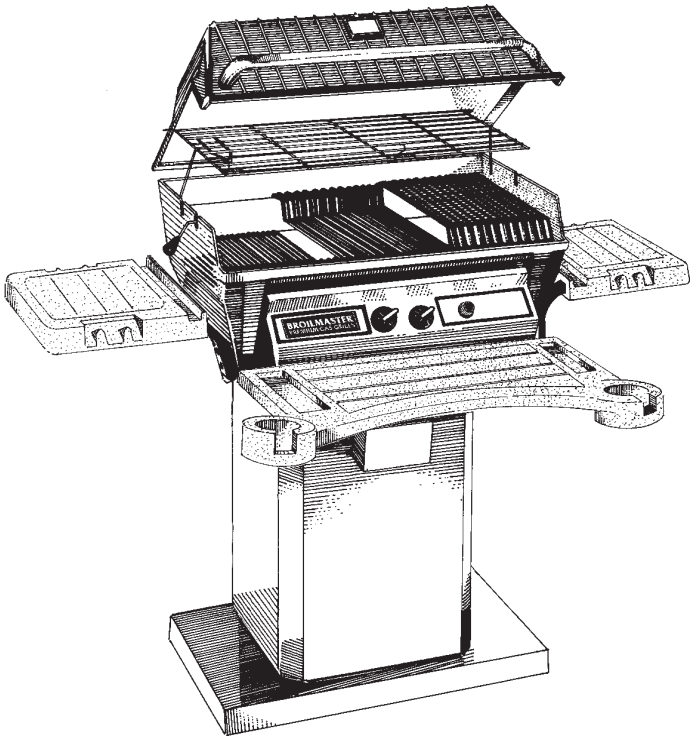

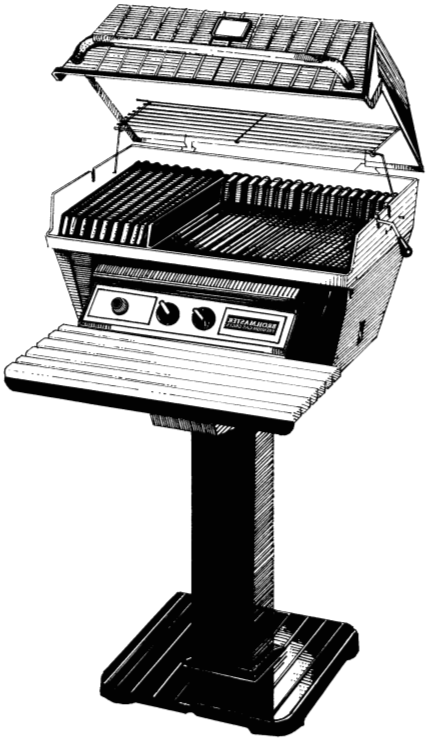

For use with Broilmaster® Premium Gas Grills
For Outdoor Use Only

Retain Owner's Manual for Future Reference.

THIS GAS ACCESSORY IS DESIGNED FOR OUTDOOR USE ONLY

IMPORTANT

THIS MANUAL SHOULD BE READ THOROUGHLY BY THE PERSON INSTALLING THE GRILL MOUNTING AND ALL PERSONS WHO WILL USE AND MAINTAIN THE GRILL MOUNTING. THE INSTALLER SHOULD BE SURE THE MANUAL IS LEFT IN THE POSSESSION OF THE USER. THE USER SHOULD RETAIN THIS MANUAL FOR FUTURE REFERENCE WHEN USING OR CLEANING THE GRILL MOUNTING AND TO PROPERLY IDENTIFY ANY REPAIR PARTS THAT MAY BE REQUIRED.

WARNING

REFERENCE THIS MANUAL FOR PROPER INSTALLATION AND MAINTENANCE INSTRUCTIONS. IMPROPER INSTALLATION, ADJUSTMENT, ALTERATION, SERVICE OR MAINTENANCE CAN CAUSE PERSONAL INJURY OR PROPERTY DAMAGE. FOR ASSISTANCE OR ADDITIONAL INFORMATION CONSULT A QUALIFIED INSTALLER, SERVICE AGENCY OR THE GAS SUPPLIER.

CAUTION:

THE GRILL AND ITS INDIVIDUAL SHUTOFF VALVE MUST BE DISCONNECTED FROM THE GAS SUPPLY PIPING SYSTEM DURING ANY PRESSURE TESTING OF THAT SYSTEM AT TEST PRESSURES IN EXCESS OF 1/2 PSIG.

CAUTION:

THE GRILL MUST BE ISOLATED FROM THE GAS SUPPLY PIPING SYSTEM BY CLOSING ITS INDIVIDUAL MANUAL SHUTOFF VALVE DURING ANY PRESSURE TESTING OF THE GAS SUPPLY PIPING SYSTEM AT TEST PRESSURES EQUAL TO OR LESS THAN 1/2 PSIG.

CAUTION:

PARTS MAY HAVE SHARP EDGES. WEAR LEATHER WORK GLOVES AND HANDLE PARTS CAREFULLY DURING THE UNPACKING, ASSEMBLY AND THE INSTALLATION.

WARNING

DO NOT SUPPLY LP GAS TO A GRILL DESIGNED FOR NATURAL GAS NOR NATURAL GAS TO A GRILL DESIGNED FOR LP GAS.

CONGRATULATIONS!

You have chosen the finest grill for your outdoor cooking pleasure. Please take time to read this entire manual before assembling your premium Broilmaster® accessory.

Important Information.....2

Cart and Patio Base (DC, PC and PB Models).....3-8

Patio Post (U26 and U26SS Models) 9-13

In-Ground Post (U48 and P48 Models).....14-18

Warranty 20-21

Your Broilmaster® accessory is identified by model number, serial number, and gas type. This information is provided on a product identification label located on the accessory. The grill's model number, serial number, and gas type must also be provided when contacting your Broilmaster® dealer. For your convenience, complete this section for future reference when contacting your dealer.

Grill Information

Model No. _____ Dealer _____

Serial No. _____ Dealer Phone No. _____

Gas Type: Propane _____ Natural _____ Date of Purchase _____

Grill Location

Broilmaster® Premium Gas Grills are designed for outdoor use ONLY.

These mounting accessories are designed for use with Broilmaster® gas grills and must not be used with any other grill or for any other purpose.

Never install or operate your grill in any building, garage, or other enclosed area.

For your safety, the grill should not be installed or operated under any combustible materials, such as carports, covered porches, awnings, or overhangs.

Never install or use your grill in or on any recreational vehicle or boat.

CAUTION: THE INSTALLATION AND OPERATION OF THIS GRILL AT CLEARANCES LESS THAN SPECIFIED BELOW MAY LEAD TO THE POSSIBILITY OF FIRE, PROPERTY DAMAGE, OR PERSONAL INJURY.

A minimum clearance of sixteen (16”) inches is required from all sides of the grill to any combustible material.

A minimum clearance of eighteen (18”) inches is required from the back of the grill to any combustible material.

Examples of combustible materials are patio furniture, fences, or the wall of your home.

The area surrounding the grill should be clear to ensure proper ventilation. Do not obstruct the flow of combustion and ventilation air in any way. The ventilation openings on the propane cylinder enclosure must also remain free and clear of debris.

WARNING: DO NOT INSTALL OR OPERATE A GAS GRILL WHERE GASOLINE OR OTHER FLAMMABLE MATERIALS ARE USED OR STORED. FAILURE TO COMPLY WITH THIS WARNING COULD RESULT IN EXPLOSION OR FIRE CAUSING PROPERTY DAMAGE OR PERSONAL INJURY.

Gas Types

Never use liquid propane gas with a grill designed for natural gas, or natural gas with a grill designed for liquid propane gas. The type of gas required for your grill is defined on its product identification label. Questions regarding different types of gases should be directed to your gas supplier.

Cleaning

The exterior of your cart or post may be cleaned with hot water and mild detergent as needed.

Touch-up paint is available through your Broilmaster® dealer.

Stainless steel surfaces may be cleaned with a spray-on stainless steel cleaner available at most hardware stores.

Important: Do not use harsh or abrasive cleaners! Your cart or post has a highly polished surface and may be easily scratched.

PERIODIC INSPECTION AND MAINTENANCE

Periodic inspections and maintenance are essential. All Broilmaster® Gas Grill products or mechanical devices eventually begin to wear due to environment, contaminants, corrosion or aging. Inspect all components at least twice per year and replace any that show wear.

If any parts are damaged or missing, you may order parts from your local Broilmaster® dealer. Please refer to the Parts Diagram and Parts List section of this manual for more detailed information.

BROILMASTER®
PREMIUM GAS GRILLS

PC, DC Cart and PB Base
Installation Instructions

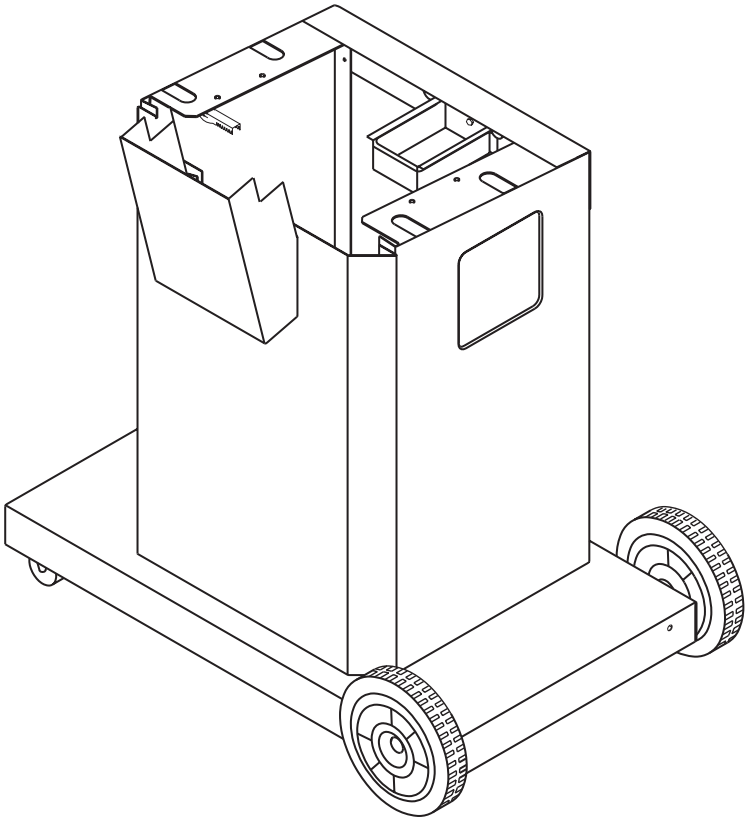

Verify that all parts listed on the exploded view of this manual have been included in this Cart before beginning installation.

Caution: Use caution when handling parts, as they may contain sharp edges. Work gloves are recommended to prevent injury.

Keep This Owner's Manual For Future Reference.

Empire Comfort Systems, Inc • 918 Freeburg Ave. • Belleville, IL 62220 • 618-233-7420

Cart Exploded View

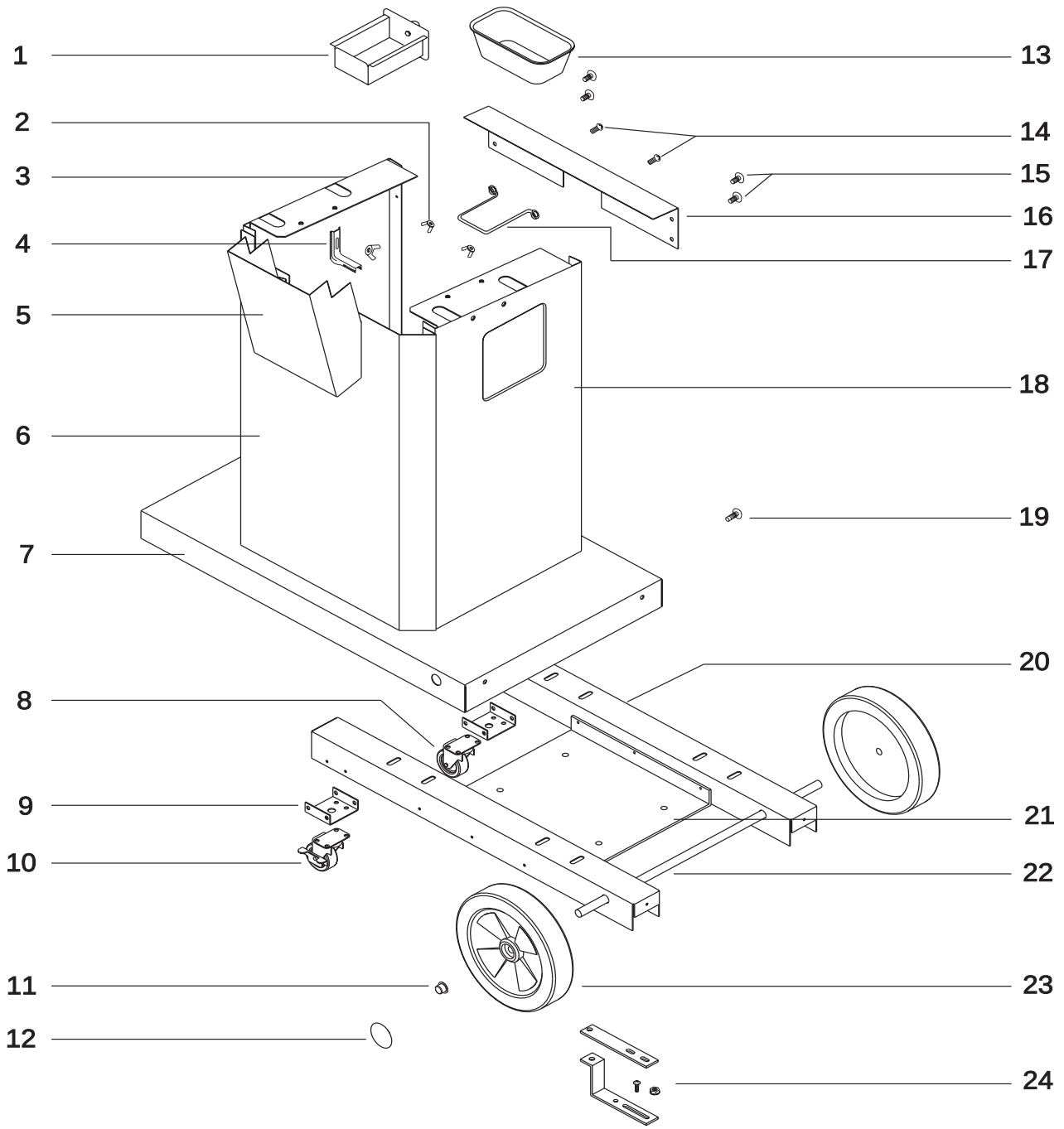

Remove protective coating and verify that all parts listed on the exploded view of this manual have been included before beginning assembly.

Caution: Use caution when handling parts, as they may contain sharp edges. Work gloves are recommended to prevent injury.

Tools Required: Phillips Screw Driver (An electric screw driver or drill is recommended to ease installation.)

CART PARTS LIST

All repair part orders should be placed through your local Broilmaster® dealer. To locate a dealer in your area, contact Broilmaster Customer Service at (618) 233-7420. To ensure prompt and accurate service, please provide the following information when placing a repair part order: Model Number, Part Name, Part Number, and Quantity of parts needed.

Key No.	Part Name	Qty.	PC Part No.	DC Part No.	PB Part No.
1	Drip Pan Drawer	1	072206	072211	072206
2	Wing Nut	3	063097	072181	063097
3	Left Assembly	1	076782	076785	076782
4	Cylinder Retainer	1	064791	064791	064791
5	Control Housing	1	072221	072222	072221
6	Front Assembly	1	072178	072191	072178
7	Base Assembly	1	072163	072187	072164
8	Caster with out Brake	1	063103	063103	N/A
9	Caster Pad	2	072232	072234	N/A
10	Caster with Brake	1	063104	063104	N/A
11	Hub Cap	2	9130020	9130020	N/A
12	Hub Cap Cover	2	063106	073271	N/A
13	Drip Pan	2	060337	060337	060337
14	10-24x3/8 Phillips Truss Screw	2	HD388	HD577	HD388
15	1/4-20x3/4 Phillips Truss Screw	17	072217	072220	072217
16	Rear Brace	1	072201	072203	072201
17	Drip Pan Bracket	1	072215	072215	072215
18	Right Assembly	1	076783	076787	076783
19	10-32x1/2 Phillips Screw	6	076537	076537	076537
20	Base Channel	2	072212	072213	072212
21	Tie Down Plate	1	N/A	N/A	070492
22	Axle	1	063107	063107	N/A
23	8" Wheel	2	063105	073272	N/A
24	Burner Stabilizer Kit*	1	906236	906236	906236

*See your grill manual for instructions on how to install the Burner Stabilizer.

1

Tip: To aid in the assembly process , you may be asked to leave certain screws loose until later in the assembly process. Please pay close attention to each step to determine if you should tighten screws at that time.

Caution: Be careful when handling parts, as they may contain sharp edges. Work gloves are recommended to prevent injury.

Insert six #10-32 x 1/2 phillips screws (19) into the factory installed clip nuts on the front assembly (6). Leave an 1/8" gap beneath the head of the screws as shown by Figure 1.

Attach front assembly (6) to base (7) with two ˘-20 x 3/4 phillips screws (15). Figure 2. Do not tighten screws at this time.

FIGURE 1

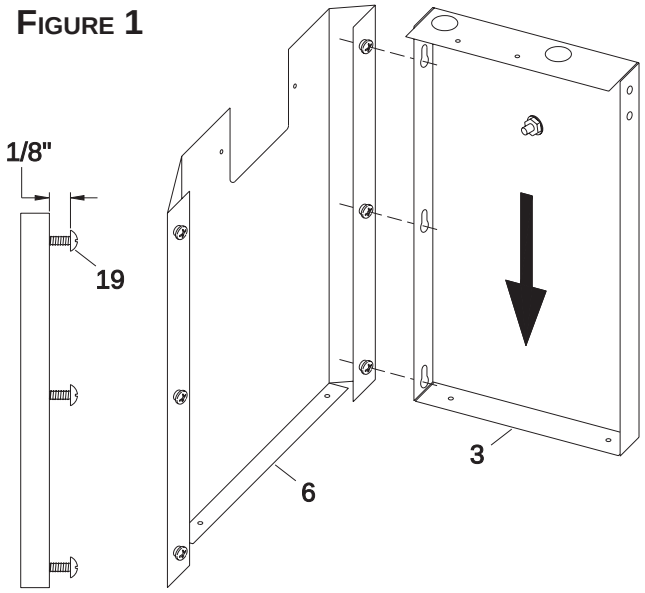

FIGURE 2

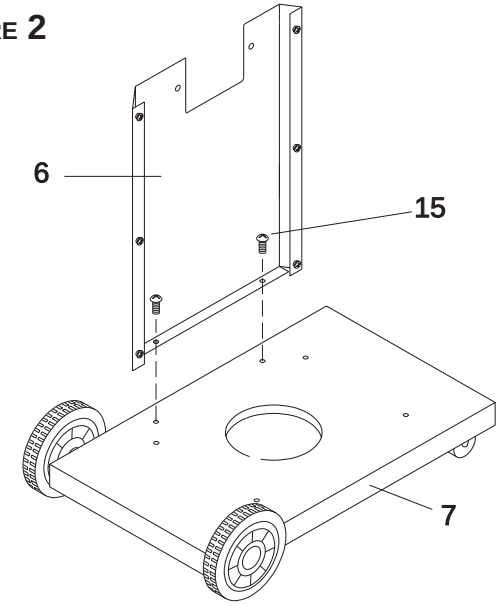

2

Fasten side assemblies (3,18) to the front assembly (6) by aligning the keyholes on the side panels to the three screws installed by Step 1, on the front panel, then push down.

Attach the side assemblies to the base (7) with two ˘-20 x 3/4 phillips screws. Do not tighten screws at this time.

3

Attach drip pan bracket (17) to the cart with two ˘-20 x 3/4 phillips screws (15) and two ˘-20 Wing Nuts (2). Figure 3.

FIGURE 3

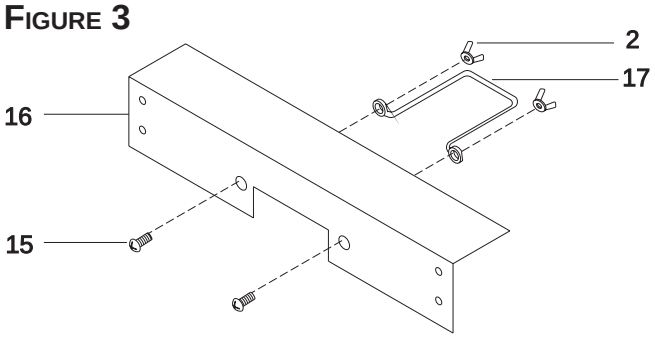

4

Attach the Rear Brace (16) to the Left and Right Side Assemblies with four ˘-20 x 3/4 screws (15). Figure 4.

Important: Completely tighten all screws at this time.

FIGURE 4

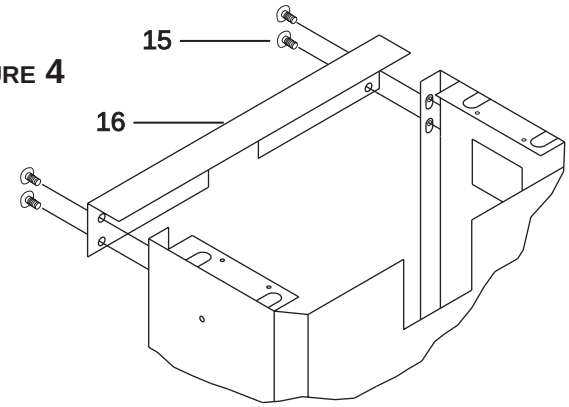

FIGURE 5

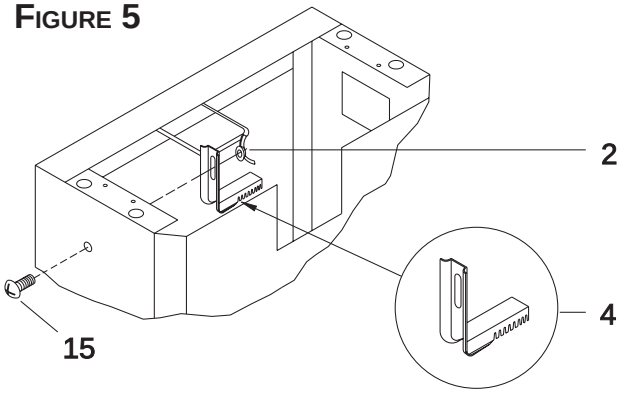

5

Install one 1/4-20 x 3/4 phillips screw (15) into the factory installed nut on the Left Side Assembly.

Fasten the Cylinder Retainer (4) to the screw with a wing nut (2). Adjust height to accommodate your LP cylinder. Figure 5.

6

Slide the flanges of the Control Housing (5) behind the opening. Allow the Control Housing to rest at the bottom of the opening. Figure 6.

FIGURE 6

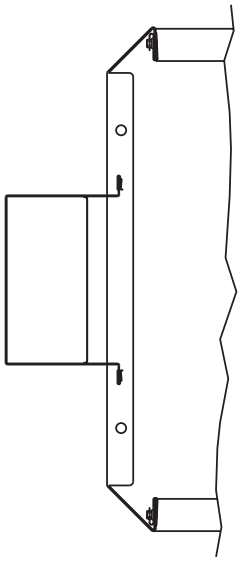

7

Using four ˇ-20 x 3/4 screws (15), fasten the grill to the cart. Figure 7.

Note: To ease assembly you may wish to install the igniter as shown in your Broilmaster® grill manual before attaching the grill to the cart.

FIGURE 7

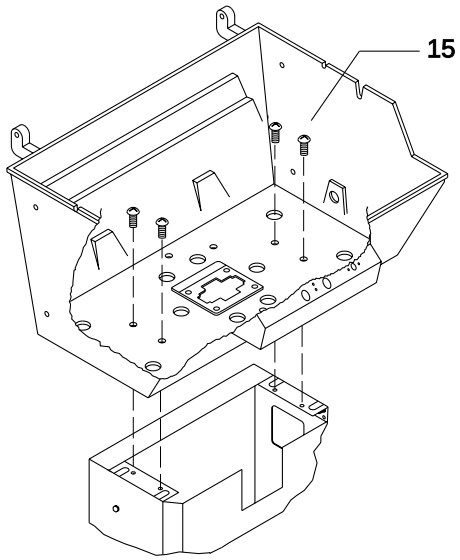

FIGURE 8

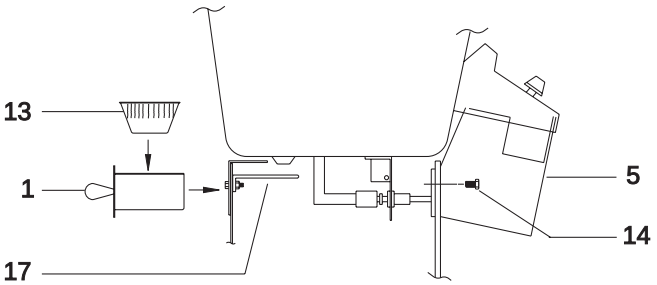

8

Align the holes in the front with the nuts on the control housing (5) (with flanges positioned inside cart) and fasten with two 10-24 x 3/8 phillips head screws (14). Place the drip pan (13) in the drip pan drawer (1) and slide onto drip pan bracket (17). Figure 8.

PB Model: Tie down plate (21) provided to anchor post base to patio or deck. Hardware not included.

BROILMASTER®
PREMIUM GAS GRILLS

U26 and U26SS Patio Base Post
Installation Instructions

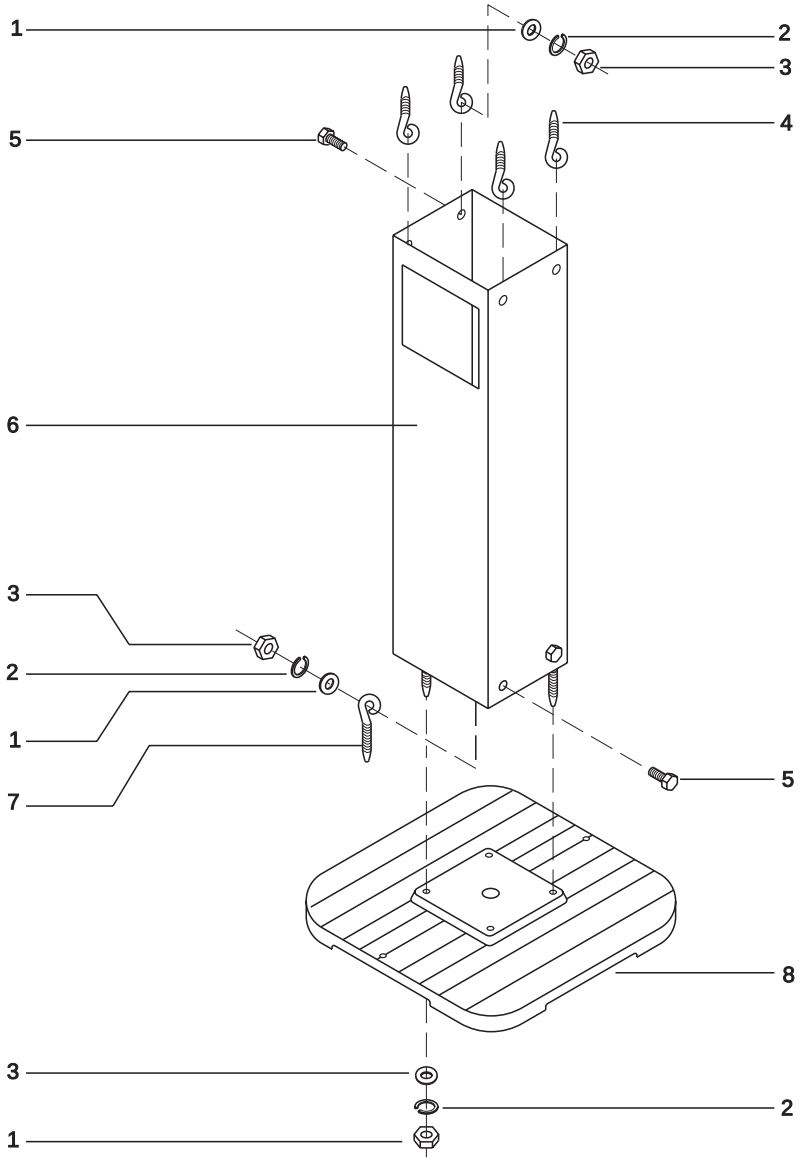

Warning: This in-ground post is not designed for use with an LP gas cylinder.

Keep This Owner's Manual For Future Reference.

Empire Comfort Systems, Inc. • 918 Freeburg Ave. • Belleville, IL 62220 • 618-233-7420

PATIO BASE POST PART LIST

All repair part orders should be placed through your local Broilmaster® dealer. To locate a dealer in your area, contact Broilmaster Customer Service at (618) 233-7420. To ensure prompt and accurate service, please provide the following information when placing a repair part order: Model Number, Part Name, Part Number, and Quantity of parts needed.

ITEM NUMBER	PART NUMBER	QTY.	U26 PART NUMBER	U26SS PART NUMBER
1	9/32 ID x 5/8 OD FLAT WASHER	16	HD504	HD504
2	1/4 LOCK WASHER	12	HD545	HD545
3	1/4-20 HEX NUT	16	HD197	HD197
4	1/4-20 x 1-3/4" EYEBOLT	4	HD170	HD170
5	1/4-20 x 3/4" BOLT	8	HD125	063096
6	26" SQUARE POST	1	878517P	070283
7	1/4-20 x 4" EYEBOLT	4	HD009	HD009
8	CAST IRON PATIO BASE	1	826468	826468
9	10-24 WING NUT	1	HD242	HD242
10	CONTROL HOUSING	1	896076P	064854
11	#10 SCREW/PANEL FASTENER	2	HD427	068182
12	STAINLESS STEEL FLEX TUBE ASSEMBLY	1	076518	076518
13	GREASE CUP BRACKET ASSEMBLY	1	065821	065821
14	MALE FLARE FITTING	1	248x6x6	248x6x6

The U26 and U26SS Patio Base Posts are only for use with Broilmaster® Gas Grills. Before proceeding with installation read the Owner's Manual for the proper location and minimum clearances to combustible materials for your grill and patio base post.

Verify that all parts listed in the exploded view of this product have been included before beginning this installation.

Recommended Tools:

- Two adjustable wrenches or a socket set
- A medium Phillips screwdriver
- Pipe thread sealer or Teflon tape (for gas connections)
- Soapy water solution (to test for leaks)

1

Attach four ˇ-20 x 4" eyebolts (7) to the bottom of the square post using hex head bolts (5), flat washers (1), lock washers (2), and nuts (3). Figure 1.

NOTE: The large rectangular cut out is located at the front of the post near the top.

FIGURE 1

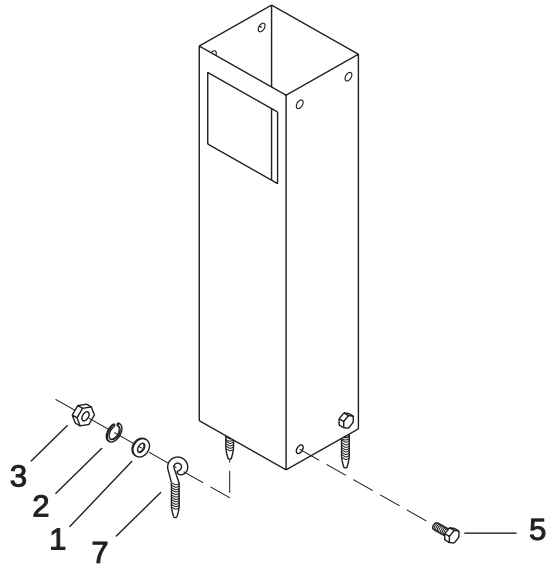

2

Fasten the bottom of the post to the cast iron patio base using flat washers (1), lock washers (2), and nuts (3). FIGURE 2.

Anchor the base to your patio using the two holes provided in the base. (Hardware not included)

Note: Make sure that the large rectangular cut out is facing in the direction that you want your grill to face. FIGURE 2.

FIGURE 2

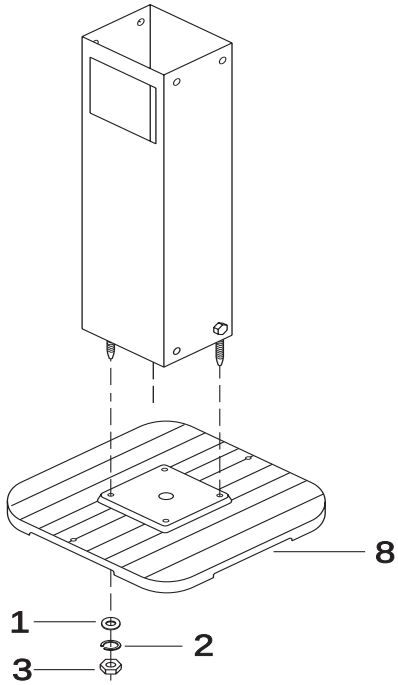

3

Insert the flex tubing into the post.

The inlet side of the gas tubing may protrude from the bottom of the patio base or through the large circular hole in the back of the square post.

Note: Do not attempt to cut or alter the flex tube in any way.

4

Fasten the four ˘-20 x 1³/₄" short eyebolts (4) to the top of the square post using hex head bolts (5), flat washers (1), lock washers (2), and nuts (3).

Position the grill head onto the eyebolts and fasten with lock washers (2) and nuts (3). FIGURE 3.

FIGURE 3

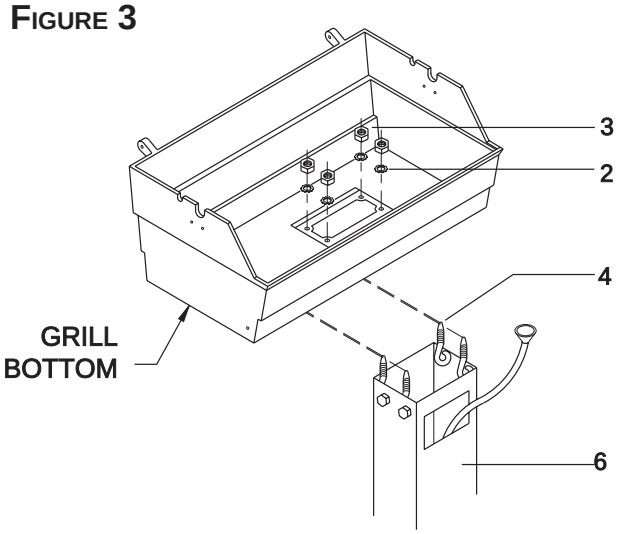

5

Arrange with your local gas company to have a gas supply line connected to the inlet of the flex tube. The gas supply must have a shutoff valve inside the wall and must be shutoff when the grill is not in use.

Use pipe thread sealant or Teflon tape at the threads of each connection being careful to **not** allow any of these materials into the flare seat. Test for gas leaks as directed by the grill's Owner Manual.

THE GRILL AND ITS INDIVIDUAL SHUTOFF VALVES MUST BE DISCONNECTED FROM THE GAS SUPPLY PIPING SYSTEM DURING ANY PRESSURE TESTING OF THAT SYSTEM AT TEST PRESSURES IN EXCESS OF ˚ PSIG.

THE GRILL MUST BE ISOLATED FROM THE GAS SUPPLY PIPING SYSTEM BY CLOSING ITS INDIVIDUAL MANUAL SHUTOFF VALVES DURING ANY PRESSURE TESTING OF THE GAS SUPPLY PIPING SYSTEM AT TEST PRESSURES EQUAL TO OR LESS THAN ˚ PSIG.

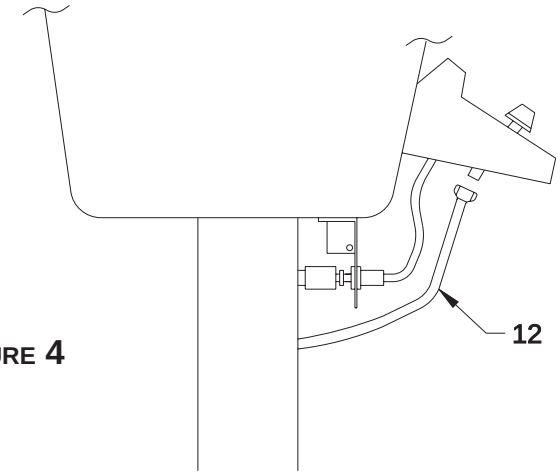

FIGURE 4

WARNING: DO NOT SUPPLY LP GAS TO A GRILL DESIGNED FOR NATURAL GAS OR NATURAL GAS TO A GRILL DESIGNED FOR LP GAS.

6

Attach the retainer bracket to the slide with a wing nut as shown by Figure 5.

FIGURE 5

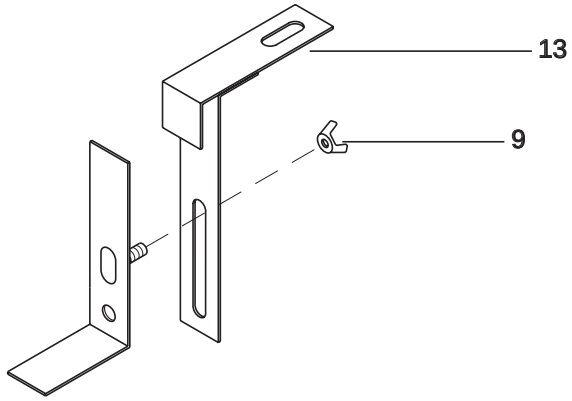

7

Attach the bracket and slide assembly to the factory installed screw located in the bottom of the grill housing. Figure 6.

Loosen the wing nut and move the slide up or down to accept the grease cup. Be sure to trap the rim of the cup as shown.

Use only noncombustible containers for the grease cup (aluminum or tin cans) do not use combustible containers such as Styrofoam or paper cups.

FIGURE 6

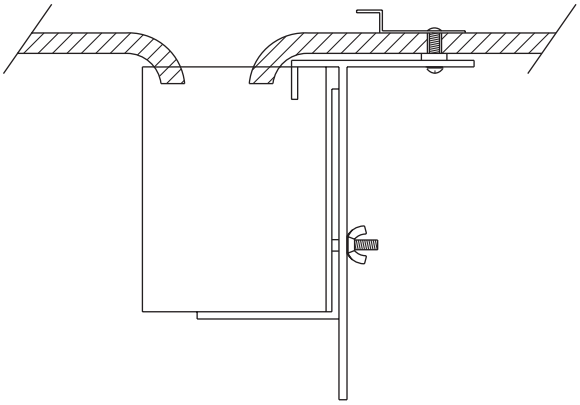

8

Attach the control housing (10) using two #8 x 1/2 screws (11) or two plastic panel fasteners as shown in Figure 7.

FIGURE 7

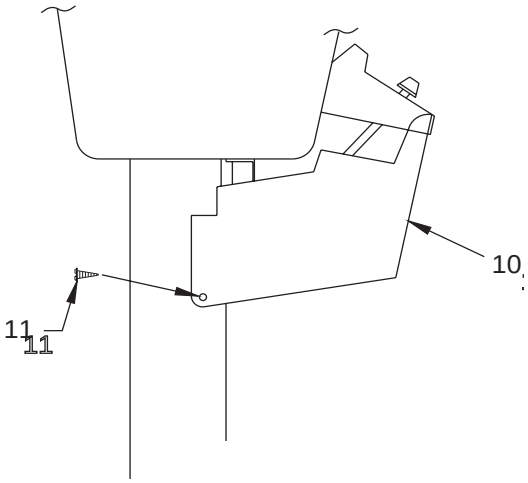

9

Continue assembly as directed by the Owner's Manual packaged with the grill head.

BROILMASTER®
PREMIUM GAS GRILLS

U48 AND P48 IN-GROUND POST INSTALLATION INSTRUCTIONS

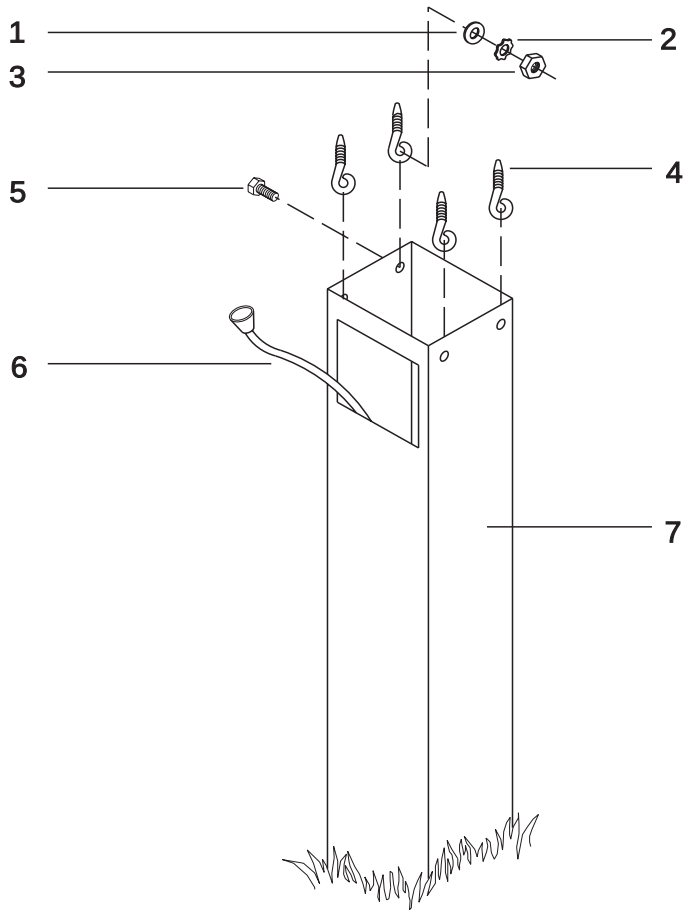

WARNING: THIS IN-GROUND POST IS NOT DESIGNED FOR USE WITH AN LP GAS CYLINDER.

WARNING: SEE YOUR GRILL OWNER'S MANUAL FOR PROPER LOCATION, MINIMUM CLEARANCES, AND OTHER IMPORTANT SAFETY INFORMATION BEFORE PROCEEDING WITH INSTALLATION OF THIS IN-GROUND POST.

KEEP THIS OWNER'S MANUAL FOR FUTURE REFERENCE.

EMPIRE COMFORT SYSTEMS, INC. • 918 FREEBURG AVE. • BELLEIVLLE, IL 62220 • 618-233-7420

IN-GROUND POST PARTS DIAGRAM

All repair part orders should be placed through your local Broilmaster® dealer. To locate a dealer in your area, contact Broilmaster® Customer Service at (618) 233-7420. To ensure prompt and accurate service, please provide the following information when placing a repair part order: Model number of your Side Burner, Part Name, Part Number, and Quantity of parts needed.

ITEM NUMBER	PART NUMBER	QTY.	U48 PART NUMBER	P48 PART NUMBER
1	1/4 FLAT WASHER	4	HD504	HD504
2	1/4 LOCK WASHER	8	HD582	HD582
3	1/4-20 HEX NUT	8	HD197	HD197
4	1/4-20x1 3/4" EYEBOLT	4	HD170	HD170
5	1/4-20x3/4" BOLT	4	HD125	063096
6	STAINLESS STEEL FLEX TUBE ASSEMBLY	1	076519	076519
7	48" POST	1	825615P	064573
8	CONTROL HOUSING	1	896076P	064854
9	#8 SCREW/PLASTIC PANEL FASTENER	2	HD427	068182
10	MALE FLARE FITTING	1	248x6x6	248x6x6
	GREASE CUP ASSEMBLY	1	065821	065821

VERIFY THAT ALL PARTS LISTED IN THE EXPLODED VIEW ON THIS PAGE HAVE BEEN INCLUDED BEFORE BEGINNING THIS INSTALLATION.

CAUTION: USE CAUTION WHEN HANDLING PARTS, AS THEY MAY CONTAIN SHARP EDGES.

WORK GLOVES ARE RECOMMENDED TO PREVENT INJURY.

The U48 and P48 In-Ground Posts are only for use with Broilmaster® Gas Grills. Before proceeding with installation read your Owner's Manual for the proper location and minimum clearances to combustible materials for your grill and in-ground post.

Verify that all parts listed in the exploded view of this product have been included before beginning this installation.

Recommended Tools:

- Two adjustable wrenches or a socket set
- A medium Phillips screwdriver
- Pipe thread sealer or Teflon tape (for gas connections)
- Soapy water solution (to test for leaks)

1

Dig a hole approximately 12" in diameter and 24" in depth at the desired grill location.

Note: "Normal Installation" height is achieved when the top of the in-ground post (7) is 25 1/4" above ground. This height provides a cooking surface height of 34 1/2" above ground when grids are placed in the high level position.

Carefully lower the in-ground post into the hole using the following guidelines:

- The rectangular cut-out is located near the TOP of the post and should be above ground after installation.
- The rectangular cut-out must face in the SAME direction as the front of the grill.
- Hole depth and post measurements should be checked to ensure desired height.

Note: Make any adjustments at this time.

Prepare concrete or a standard pre-mix according to the manufacturer's package directions.

Position the post in the center of the hole. A level should be used when aligning the post to achieve precise vertical alignment. Hold the post in place while pouring the concrete mixture into the hole around the post.

CAUTION: THE CONCRETE MIXTURE MUST NOT COVER THE GAS SUPPLY ENTRY HOLE ON THE POST. THE GAS SUPPLY ENTRY HOLE (2" DIAMETER HOLE) IS LOCATED 18 3/4" FROM THE BOTTOM OF THE POST.

Make a final alignment check with the level, and adjust as needed. Allow concrete to set (usually 24 hours).

2

After the concrete has set, insert the tubing (6) in the post. Figure 1.

Note: Do not attempt to cut or alter the flex tube in any way.

FIGURE 1

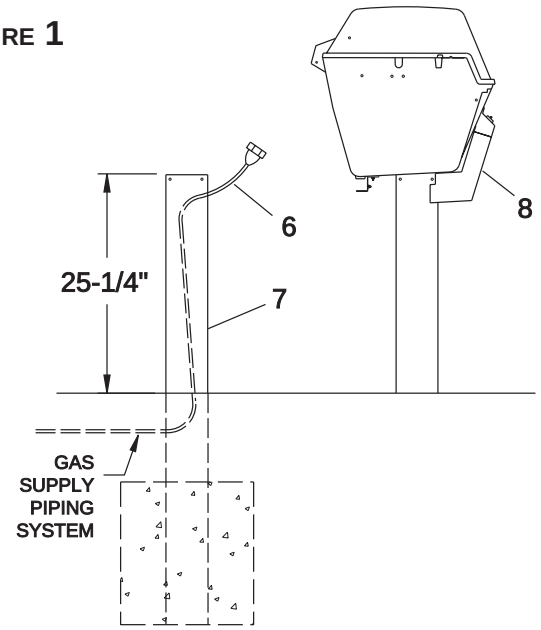

3

Insert a bolt (5) through one of the four holes in the top of the post. Fasten an eyebolt (4), flat washer (1), lock washer (2), and nut (3) to the bolt (5) Inside the post. Repeat this process for the three remaining holes. Figure 2.

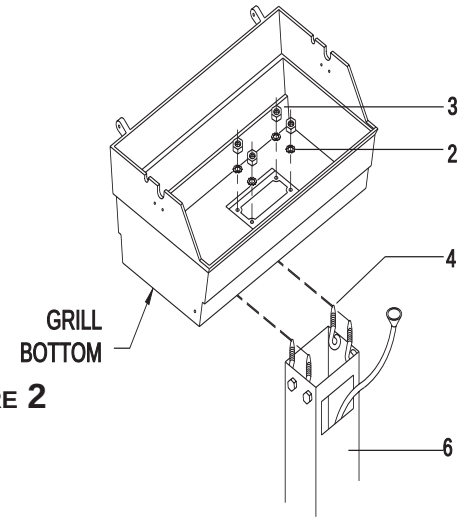

FIGURE 2

4

Place the grill bottom on top of the post with the four eyebolts (4) protruding through the holes located on the grill bottom.

Secure the grill bottom to the post by placing a lock washer (2) and nut (3) onto each of the four eyebolts (4). Figure 3.

FIGURE 3

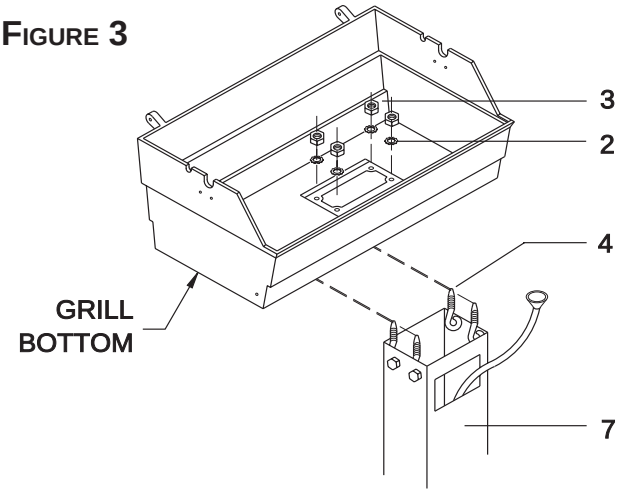

5

Note: See grill Owner's Manual for location of the grill's gas valve.

Arrange with the gas company to have a gas supply piping system installed and connected to the bottom end of the copper tubing (6). Figure 2.

Note: See label on grill for gas pressure information. The gas supply piping system MUST have a shutoff valve. The valve must remain in the OFF position when the gas supply piping system is not in use.

Gas leak tests should be completed as directed in the grill Owner's Manual.

Completely fill remaining hole with soil.

6

Attach the control housing using two #8 x 1/2 screws (11) or two plastic panel fasteners as shown in Figure 4.

FIGURE 4

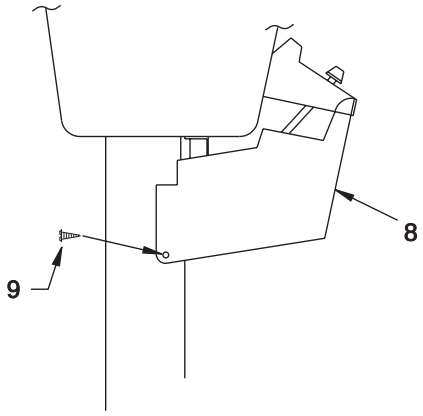

7

Assemble the grease cup bracket using a #10 Wing Nut. Figure 5.

FIGURE 5

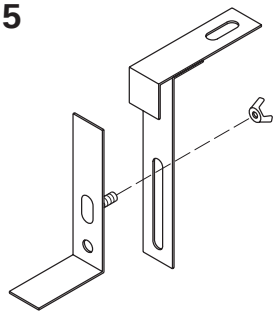

8

Use the factory installed screw to fasten the grease cup bracket to the bottom of the grill. Slide the bracket up or down to install. Figure 6.

Use only noncombustible containers for the grease cup (aluminum or tin cans). DO NOT use combustible containers such as paper or Styrofoam cups.

Complete grill assembly as directed in the grill Owner's Manual.

FIGURE 6

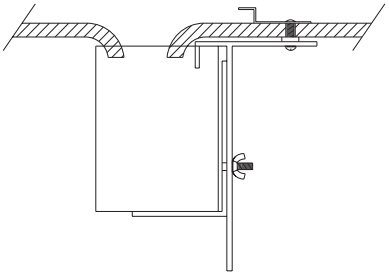

BROILMASTER®
PREMIUM GAS GRILLS

LIMITED WARRANTY

Manufactured by: BROILMASTER®, A Division of Empire Comfort Systems, Inc., 918 Freeburg Ave., Belleville, Illinois 62220.

WHAT IS COVERED AND FOR HOW LONG

From the date this gas grill is first purchased for use, BROILMASTER® will make available, at our factory, a free replacement for any defective part in accordance with the following limitations:

- **STAINLESS STEEL CART** - Lifetime by original purchaser for as long as grill is, and safely can be used as a residential grill.
- **STAINLESS STEEL MOUNTINGS** - Lifetime, as long as grill is, and safely can be, used as a residential gas grill.
- **PAINTED ELECTROGALVANIZED STEEL COMPONENTS** - 5 years against perforation.
- **ALL OTHER PARTS** - 2 years from date of purchase.

WHAT IS NOT COVERED

- Removal and reinstallation cost.
- Labor costs for replacement or repairs.
- Transportation or shipping cost.
- The cost of a service call to diagnose trouble.
- Finishes on surfaces.
- Damage caused by improper installation, improper storage, accident, misuse, abuse or alteration.
- Unsatisfactory performance due to improper or lack of cleaning.

LIMITATIONS AND EXCLUSIONS

1. No one has authority to add to or vary this limited warranty, or to create for BROILMASTER® any other obligation of liability in connection with this grill mounting.
2. ANY IMPLIED WARRANTY APPLICABLE TO THIS GRILL MOUNTING IS LIMITED IN DURATION TO THE SAME PERIOD OF TIME AS THIS WRITTEN WARRANTY. Some states do not allow limitations on how long an implied warranty lasts, so the above limitations may not apply to you.
3. BROILMASTER® SHALL NOT BE LIABLE FOR INCIDENTAL, CONSEQUENTIAL, SPECIAL OR CONTINGENT DAMAGES YOU MIGHT SUFFER AS A RESULT OF ITS BREACH OF THIS WRITTEN WARRANTY OR ANY IMPLIED WARRANTY. Some states do not allow the exclusion of limitation of incidental or consequential damages, so the above limitations may not apply to you.
4. This warranty applies only to the original purchaser and may not be transferred.

5. This warranty applies only to gas grill mountings sold and used in the United States or Canada.
6. This warranty applies only to gas grill mountings.
7. If you cannot verify the purchase date of the grill mounting the warranty period will begin on the date the grill mounting was manufactured.
8. Replacement or repair parts are warranted for the remaining period of the original part warranty.

YOUR DUTIES

This grill mounting must be assembled, installed, operated and maintained in accordance with all applicable codes and the instruction manual furnished with the grill mounting. You must keep an invoice, canceled check or payment record to verify the purchase date of the grill mounting.

IF YOU HAVE A PROBLEM WITH YOUR GRILL MOUNTING

1. Contact your BROILMASTER® dealer. If you cannot locate your dealer, call or write BROILMASTER® Technical Service Department as indicated below.
2. If you do not receive satisfactory service from the dealer within a reasonable time, write BROILMASTER® Technical Service Department and include the date you purchased your grill mounting, its model number, the name and address of the dealer from whom it was purchased, and a description of the problem you are having. Furnish a dated proof of purchase if your grill mounting is within its warranty period.

Technical Service Department
BROILMASTER®
A Division of Empire Comfort Systems, Inc.
918 Freeburg Ave.
Belleville, IL 62220
Phone: 800-851-3153 Fax: 618-233-7097

This warranty gives you specific legal rights, and you may also have other rights which vary from state to state.

BROILMASTER®
A Division of Empire Comfort Systems, Inc.
918 Freeburg Ave.
Belleville, Illinois 62220
Phone: 618-233-7450 Fax: 618-233-7097
1-800-851-3153

Visit our web site at www.broilmaster.com

Retain Owner's Manual for Future Reference.

Form No. 076814-0-0900