1

Remove end of rating label located on your grill's rail (see parts list to identify) and apply to your warranty card in box #5. If label cannot be removed, write the numbers on your warranty card.

This label contains the model and serial number for your grill. You should also write this information on page 2 of your Use and Care Manual in the "Warranty Information" box.

2

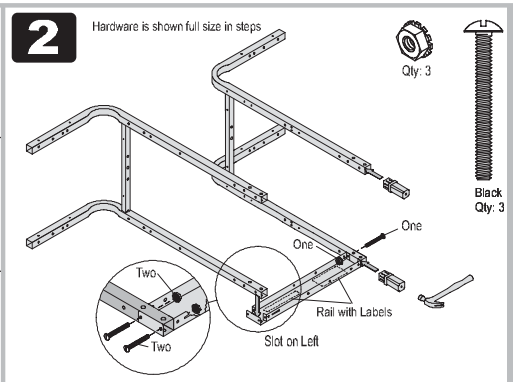

3

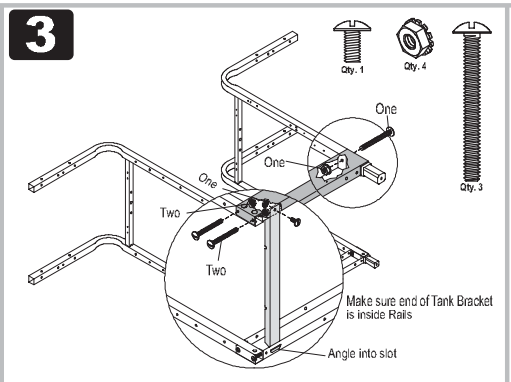

4

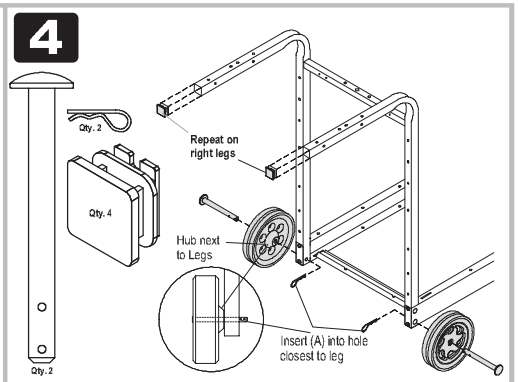

5

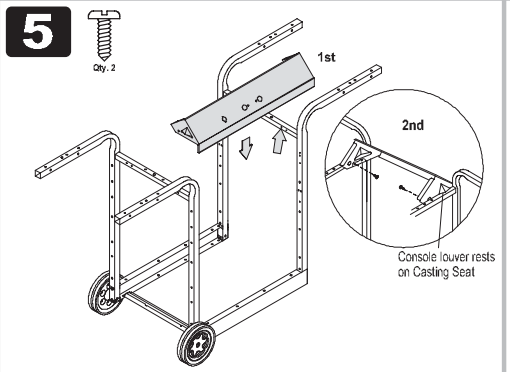

6

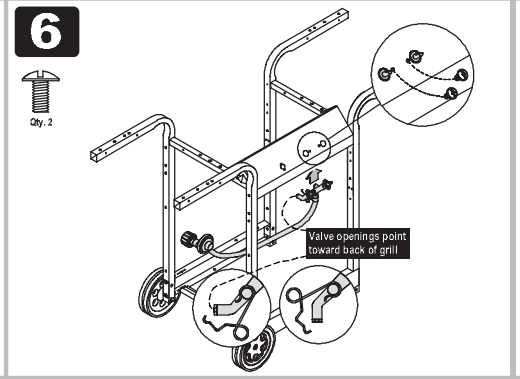

7

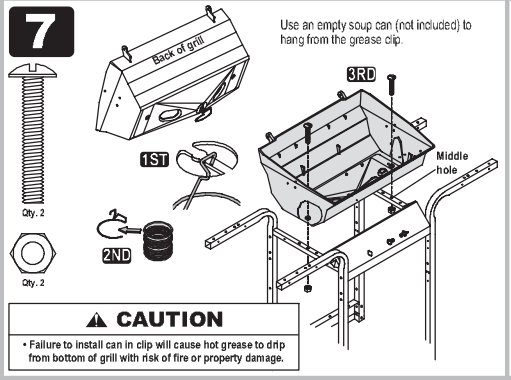

⚠ CAUTION

- Failure to install can in clip will cause hot grease to drip from bottom of grill with risk of fire or property damage.

8

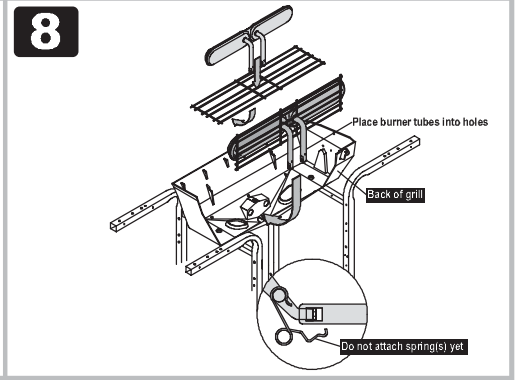

9

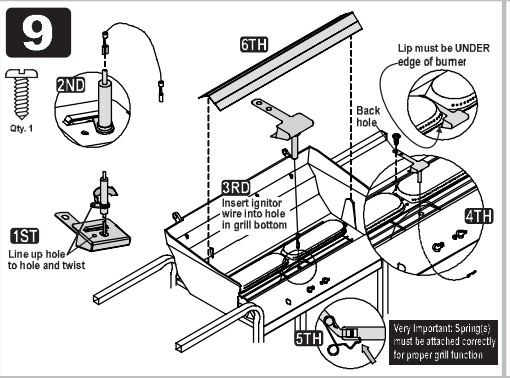

10

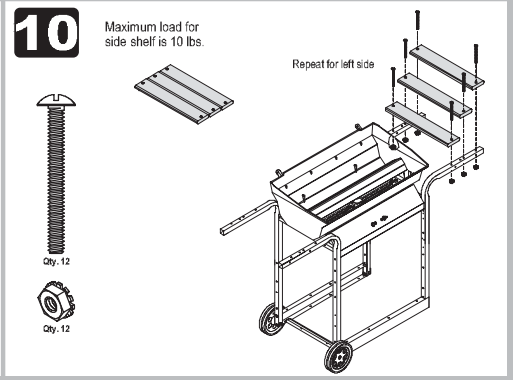

11

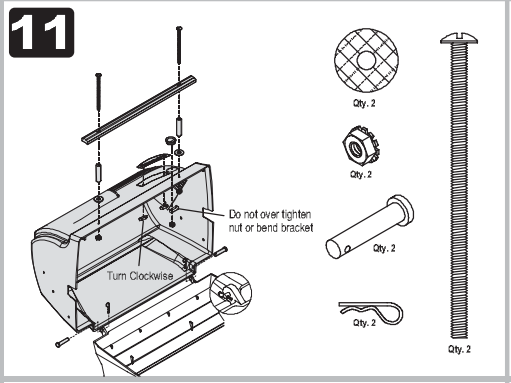

12

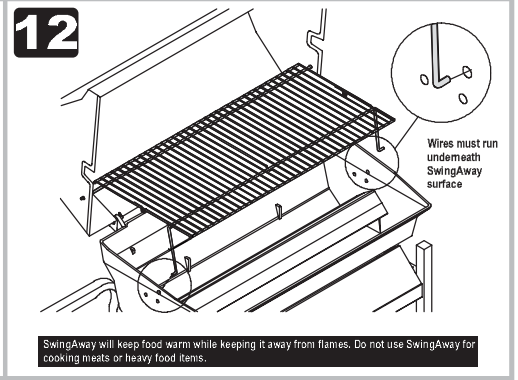

13

When installing ignitor, do not push on button. This may cause a minor shock.

Ignitor wire must not come into contact with grill bottom.

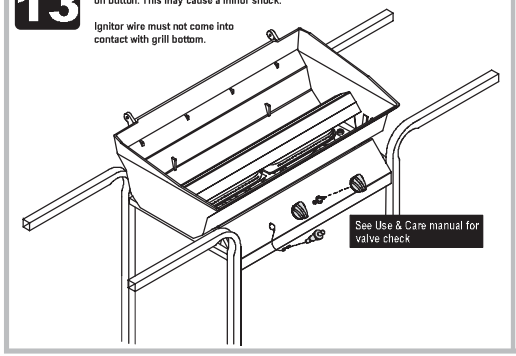

14

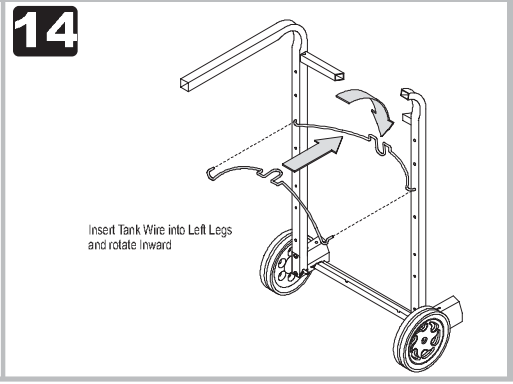

15

LP TANK IS SOLD SEPARATELY. Before attaching to grill and regulator, fill and "Leak Check" (see Use & Care for Leak Check).

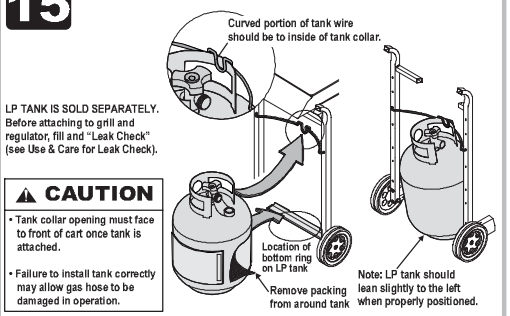

⚠ CAUTION

- Tank collar opening must face to front of cart once tank is attached.
- Failure to install tank correctly may allow gas hose to be damaged in operation.

See Use & Care Manual for important safety instructions before using.

16

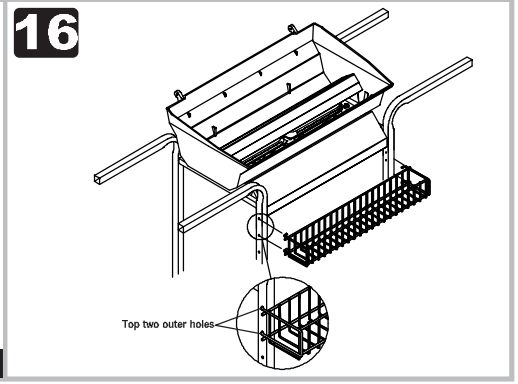

4617222