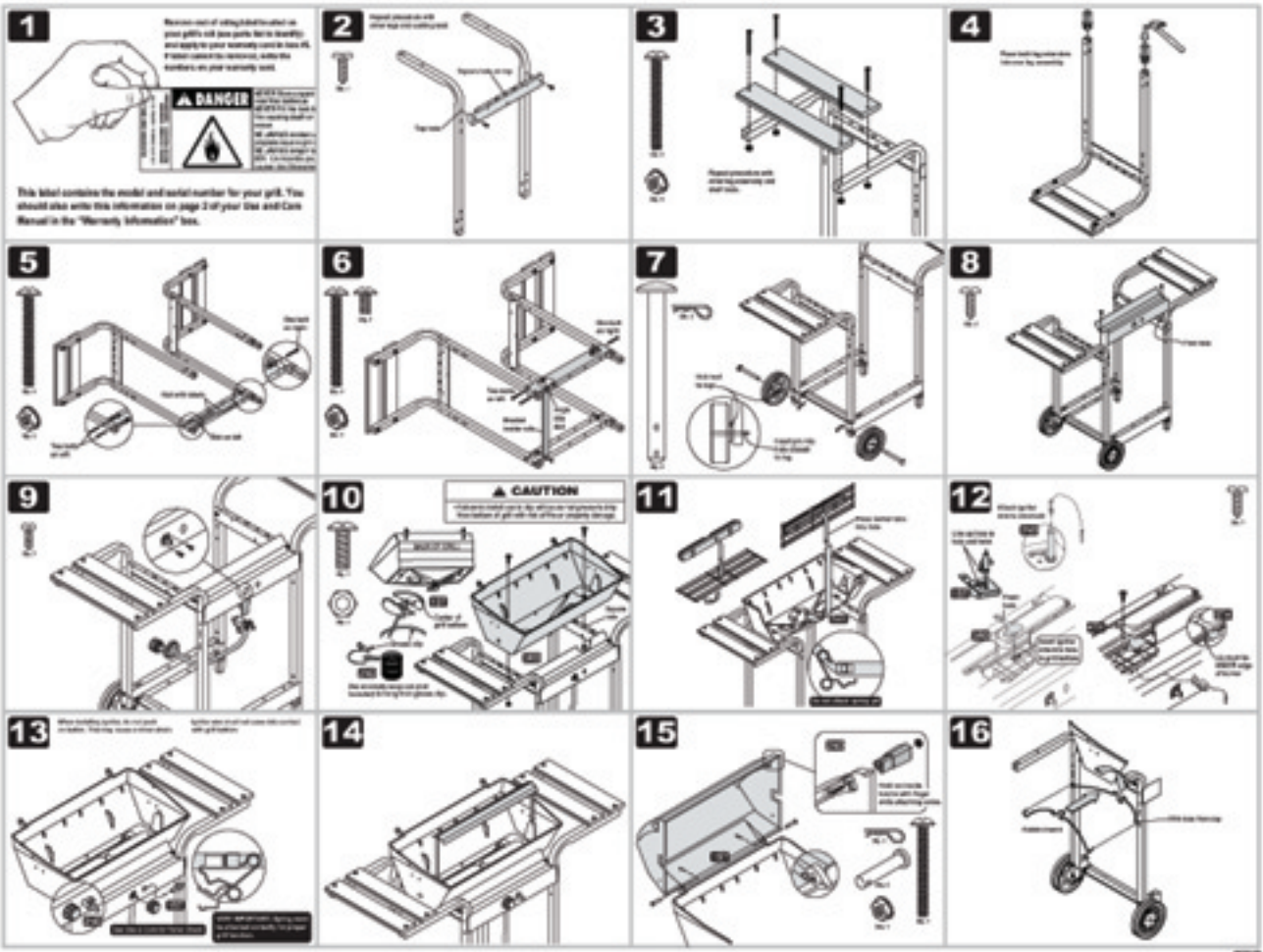
1
DANGER
This label contains the model and serial number for your grill. You should also write this information on page 2 of your Use and Care Manual in the "Warranty Information" box.
2
3
4
5
6
7
8
9
10
CAUTION
11
12
13
14
15
16

17
CAUTION
See Use & Care Manual for important safety instructions before using.
18

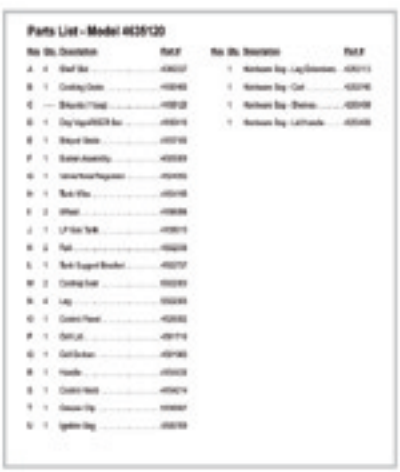
Parts List - Model 4635120

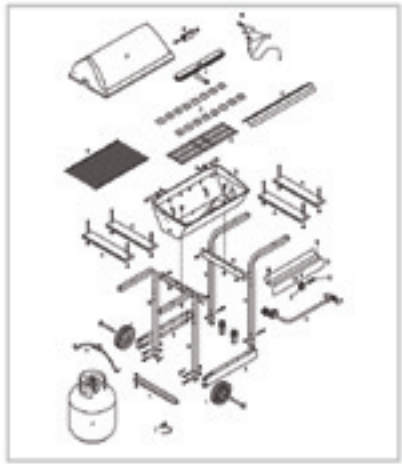

NOTHING
SHOULD COME BETWEEN
A MAN
AND HIS FLAME.
TRADITIONAL
4635120
ASSEMBLY MANUAL
THIS GRILL IS FOR OUTDOOR USE ONLY
WARNING
CAUTION
FlavorMaster