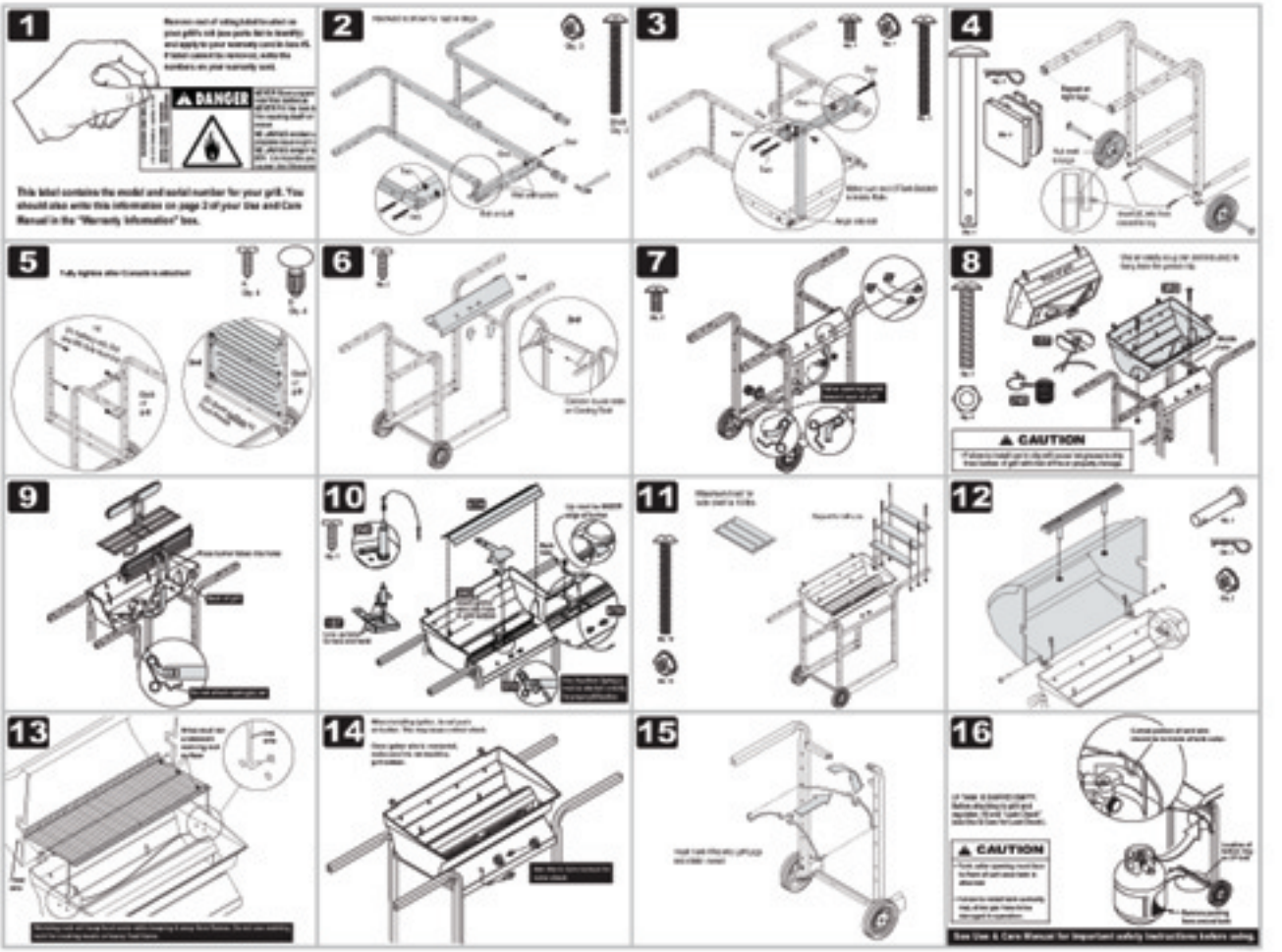

Parts List - Model 463 7254
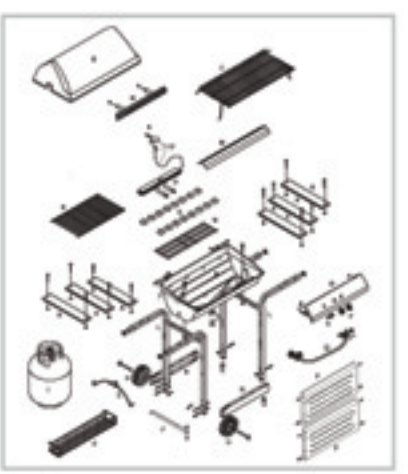
No.	Qty.	Description	Part#
A	4	Skirt Rail	[illegible]
B	1	Panel Assembly	[illegible]
C	1	Hinge Plate	[illegible]
D	1	Cooking Grate	[illegible]
E	1	Condiment Basket	[illegible]
F	4	Lower Arbor	[illegible]
G	1	Tube Wire	[illegible]
H	2	Wheel	[illegible]
I	1	LP Gas Tank	[illegible]
J	1	Tank Support Bracket	[illegible]
K	2	Rod	[illegible]
L	2	Leg Assembly	[illegible]
M	1	Grill Hood/Bowl Grate	[illegible]
N	1	Bottom Grate	[illegible]
O	—	Briquettes (2 bag)	[illegible]
P	1	Burner Assembly	[illegible]
Q	1	Valve Stem/Regulator	[illegible]
R	1	Cover	[illegible]
S	1	Grill Lid	[illegible]
T	1	Grill Handle	[illegible]
U	1	Grill Bowl	[illegible]
V	2	Caster Stem	[illegible]
W	1	Burner Cap	[illegible]
	1	Hardware Bag - Plastic Parts	[illegible]
	1	Hardware Bag - Grill	[illegible]
	1	Hardware Bag - Burner	[illegible]
	1	Hardware Bag - Lid/Handle	[illegible]