PERFORMANCE SERIES™

Char-Broil® KEEPERS OF THE FLAME

NATURAL GAS
463460406
ASSEMBLY MANUAL

THIS GRILL IS FOR OUTDOOR USE ONLY

INSTALLER/ASSEMBLER: Leave these instructions with consumer.
CONSUMER: Keep this manual for future reference.

WARNING

- Read this manual before cooking on grill. Failure to follow all manufacturers' instructions could result in fire or explosion which could cause property damage, personal injury or death.
- Combustion by-products produced when using this product contain chemicals known to the State of California to cause cancer, birth defects or other reproductive harm.

CAUTION

- Read and follow all Safety Statements, Assembly Instructions and Use & Care Directions before attempting to assemble and cook.
- Some parts may contain sharp edges, especially as noted in these instructions. Wear protective gloves if necessary.

Register your grill online at WWW.GRILLREGISTRATION.COM

STOP

If you have any problems with this product,
call 1-800-241-7548
Open 8:00 A. M. To 6:00 P. M. EST
Monday - Friday
Before returning this product to the store.
We can help with damaged or missing parts, assembly and operation questions.

Printed in USA
463460406 / 7001300 (10-13-05) - 0
© 2005 W. C. Bradley Co., All Rights Reserved
Columbus, Ga.

PRECISION GRILLING TECHNOLOGY

WARNING

FOR YOUR SAFETY

1. **Do not store or use gasoline or other flammable vapors and liquids in the vicinity of this or any other appliance.**
2. **An LP tank not connected for use shall not be stored in the vicinity of this or any other appliance.**

FOR YOUR SAFETY

If you smell gas:

1. **Shut off gas to the appliance.**
2. **Extinguish any open flame.**
3. **Open lid.**
4. **If odor continues, immediately call your gas supplier or your fire department.**

Call Grill Service Center For Help And Parts

- If you need help or warranty parts call 1-800-241-7548. Business hours: Open 24 hours – Seven days a week.
- To order non-warranty replacement parts or accessories (*grill cover, cleaners, paint*) call 1-800-993-2677 or send a FAX to 1-706-565-2121.

IMPORTANT: Fill out the warranty information below.

Model Number _____

Serial Number _____

See rating label on grill for serial number.

Date Purchased _____

CAUTION

For residential use only. Do not use for commercial cooking.

WARNING

Combustion by-products produced when using this product contain chemicals known to the State of California to cause cancer, birth defects, and other reproductive harm.

Installation Safety Precautions

- This grill is designed for natural gas use at 7 inch water column supply pressure. Verify supply pressure with your local gas company. If supply pressure is different than 7 inch, contact a certified plumber for assistance. **Not for use with LP gas.**
- Grill installation must conform with local codes, or in their absence with **National Fuel Gas Code, NFPA 54 / ANSI Z223.1**. Grill is not for use in or on recreational vehicles and/or boats.
- All electrical accessories (such as rotisserie) must be electrically grounded in accordance with local codes, or **National Electrical Code, ANSI / NFPA 70.** Keep any electrical cords and/or fuel supply hoses away from any hot surfaces.
- This grill is safety certified for use in the United States only. Do not modify for use in any other location. Modification will result in a safety hazard.

Safety Symbols

The symbols and boxes shown below explain what each heading means. Read and follow all of the messages found throughout the manual.

DANGER

DANGER: Indicates an imminently hazardous situation which, if not avoided, will result in death or serious injury.

WARNING

WARNING: Be alert to the possibility of serious bodily injury if the instructions are not followed. Be sure to read and carefully follow all of the messages.

CAUTION

CAUTION: Indicates a potentially hazardous situation which, if not avoided, may result in minor or moderate injury.

TABLE OF CONTENTS

For Your Safety 2

Grill Service Center 2

Warranty Information 2

Installation Safety Precautions 2

Safety Symbols 2

Table of Contents 3

Warranty 3

Use and Care 4-12

Parts List 13

Parts Diagram 14

Assembly 15-24

Troubleshooting 25-27

Grill Registration.com 30

WARRANTY

Manufacturer warrants to the original consumer-purchaser only that this product shall be free from defects in workmanship and materials after correct assembly and under normal and reasonable home use for the periods indicated below beginning with the date of purchase.

Castings - Limited Lifetime
All Burner - 3 years
Electronic ignition (excluding battery) - 3 years
Remaining parts (excluding battery) - 1 year

This limited warranty is for replacement of defective parts only. Manufacturer will not be responsible for failure or damage resulting from use, accident, alteration, misuse, transportation, commercial use, abuse, hostile environments, improper installation or installation not in accordance with local codes.

Manufacturer will, at its option, refinish or replace any product or part found to be defective during its respective warranty period. Manufacturer will require return of the part(s) claimed to be defective, for its inspection, freight or postage prepaid. Manufacturer may require reasonable proof of purchase and suggests that receipts be retained.

This limited warranty does not cover scratches, dents, corrosion or discoloring by heat, abrasive and chemical cleaners or any tools used in the assembly or installation of the appliance. This limited warranty does not cover surface rust, or the discoloration of stainless steel surfaces. This limited warranty does not include the cost of any inconvenience, personal injury or property damage due to failure of the product.

THIS EXPRESS WARRANTY IS THE SOLE WARRANTY GIVEN BY THE MANUFACTURER AND IS IN LIEU OF ALL OTHER WARRANTIES, EXPRESS OR IMPLIED, INCLUDING IMPLIED WARRANTY OF MERCHANTABILITY OR FITNESS FOR A PARTICULAR PURPOSE OR USE.

Neither dealers nor the retail establishment selling this product has any authority to make any additional warranties or to promise remedies in addition to or inconsistent with those stated above. Manufacturer's maximum liability, in any event, shall not exceed the purchase price of the product paid by the original consumer-purchaser.

NOTE: Some states do not allow an exclusion or limitation of incidental or consequential damages, so the above limitations or exclusions may not apply to you. This limited warranty gives you specific legal rights as set forth herein. You may also have other rights which vary from state to state. In the state of California only, if refinishing or replacement of the product is not commercially practicable, the retailer selling this product or the Manufacturer will refund the purchase price paid for the product, less the amount directly attributable to use by the original consumer-purchaser prior to discovery of the nonconformity. In addition, in the state of California only, you may take the product to the retail establishment selling this product in order to obtain performance under this limited warranty.

If you wish to obtain performance of any obligation under this limited warranty, you should write to:

Consumer Warranty / P.O. Box 1240
Columbus, GA 31902-1240

USE AND CARE

Natural Gas Connections and Service Regulators Above 1/2 psi.

Prior to 1998, all residual gas service regulators were set with an outlet pressure of 7 inches water column.

In the 1998 edition of NFPA 54, the National Fuel Gas Code, a change was made allowing service regulators of 2 and 5 psi.

With this change it was also required that an in line regulator be connected between the service regulator and the appliance regulator if the 2 or 5 psi system is used. This additional regulator is not supplied with the product.

It is possible for a consumer, making the connection themselves, or a plumber, not checking, to tap into a 2 or 5 psi line. If a pressure of 2 psi or greater is supplied to the appliance regulator on certain grills it will shut down and not deliver any gas to the grill. Other concerns are the quick disconnect socket and hose which are only rated to 1/2 psi.

If the quick disconnect socket, hose, and grill are properly connected and still not getting gas, delivery pressure needs to be verified. If pressure is greater than 1/2 psi, make sure that an in line regulator is present.

Once the grill has been over-pressured, the regulator may or may not have been damaged. The best practice is to replace the regulator.

WARNING

This grill is designed for natural gas use at 7 inch water column supply pressure. Verify supply pressure with your local gas company. If supply pressure is different than 7 inch, contact a certified plumber for assistance. **Not for use with LP gas.**

DANGER

Connection should be made by a certified plumber. Supply the plumber with a copy of these instructions. Incorrect connection can result in a gas leak with possibility of fire.

Connecting Your Grill to the Natural Gas Source

1. A professionally-installed shut-off valve between the supply piping and the socket is recommended, but not required, by the National Fuel Gas Code. Socket connection must be made outdoors.

2. Coat the gas supply pipe nipple with gas resistant dope or teflon tape. Screw socket onto gas supply pipe (house gas source) as shown in **Figure A** below, and wrench-tighten.

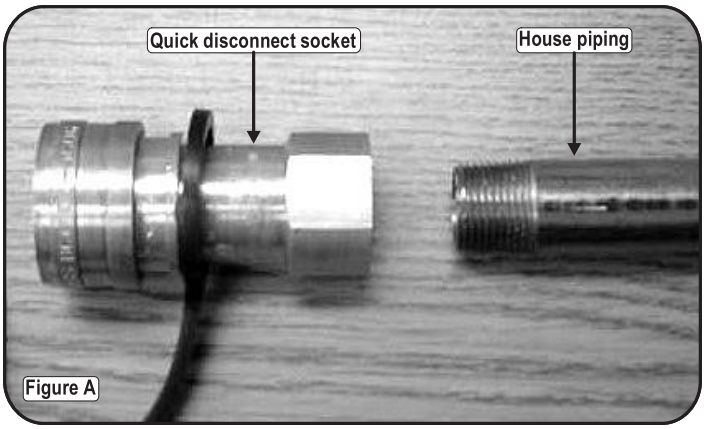

3. Pull back the sleeve on the quick disconnect socket and insert the unattached end of the gas hose into the socket. Release the sleeve and continue pushing the hose into the socket until the sleeve snaps into the locked position. See **Figure B**.

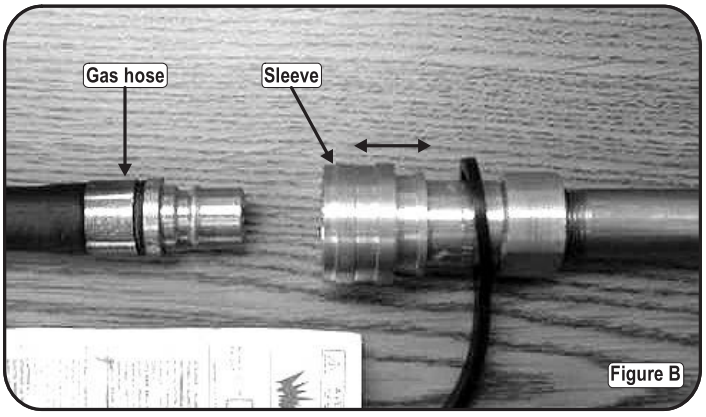

4. When the quick disconnect socket and the gas hose are connected, a valve in the socket opens automatically to permit full gas flow. When the gas hose is disconnected, the valve in the socket instantly and positively shuts off the flow of gas. Because the valve in the socket positively shuts off the flow of gas, the grill can be disconnected from the gas source by disconnecting the gas hose from the quick disconnect socket. The socket should be left attached to the gas source (house piping). **Figure C**, on the following page, shows properly connected hose and socket.

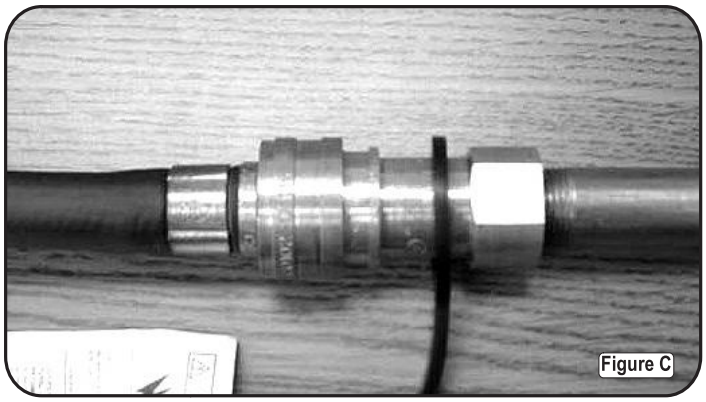
Figure C

CAUTION

If a coupling is supplied with your gas hose, do not attach the coupling to the quick disconnect socket for connection to your house piping. Use of the coupling will alter the gas flow, which may be a safety concern under some circumstances. See Figure D.

The quick disconnect socket should never be connected to the grill. Direction of gas flow is indicated on the socket.

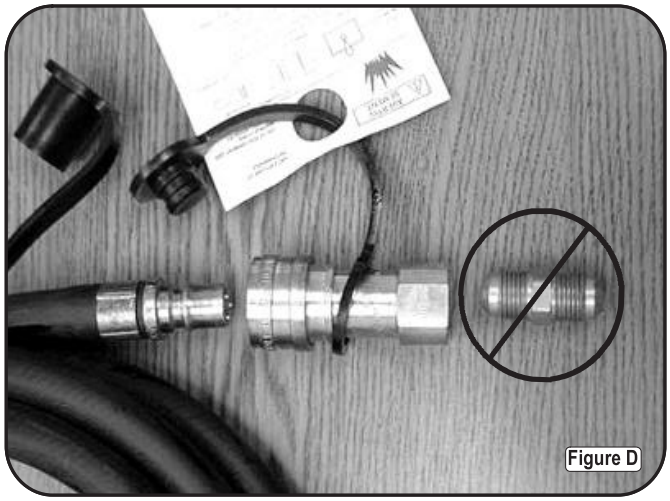
Figure D

With proper assembly, the gas hose cannot be removed without pushing the quick disconnect sleeve back. To disconnect, push sleeve back and pull plug out of sleeve (this automatically shuts off gas).

Please Note: Hose and assembly are C.S.A. listed for natural gas, manufactured gas, mixed gas and for liquefied petroleum and for LP Gas-Air mixtures on basis of 0.64 specific gravity for 1000 BTU's per cubic foot of gas at 0.3 in. water column pressure drop. Only ANSI Z21.54 approved hoses should be used with this grill.

The appliance and its individual shut off valve must be disconnected from the gas supply piping system during any pressure testing on that system at test pressures in excess of 1/2 psig (3.5kPa).

The appliance must be isolated from the gas supply piping system by closing its individual manual shutoff valve during any pressure testing of the gas supply piping system at test pressures equal to or less than 1/2 psi (3.5kPa).

WARNING

Do not use hard metal piping of any kind to connect this type of grill to natural gas source. Use only hose specified by manufacturer. Using hard metal piping or convoluted metal tubing is an unsafe practice. Movement of the grill can cause breakage of metal pipe.

Leak Testing

1. **Turn all grill control knobs to OFF.**
2. Be sure gas hose is tightly connected to gas source.
3. Completely open gas source. If you hear a *rushing sound*, turn gas off immediately. There is a major leak at the connection. **Correct before proceeding**.
4. Brush soapy solution onto area circled below.

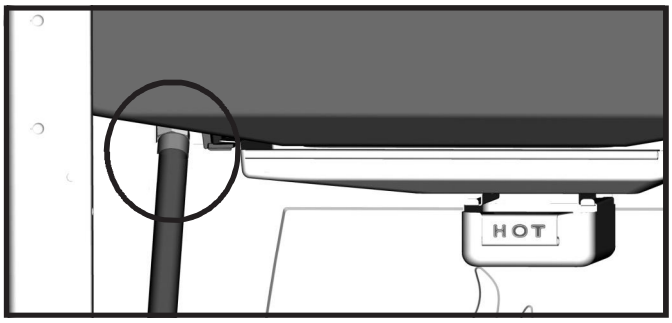

5. **If "growing"** bubbles appear, there is a leak. Close gas source immediately and retighten connection. **If leaks cannot be stopped do not try to repair.** Call for replacement parts. Order new parts by giving the serial, model number and name of items needed to the Grill Service Center at 1-800-241-7548.
6. Always close gas source after performing leak test.

WARNING

For Safe Use Of Your Grill And To Avoid Serious Injury:

- Do not let children operate or play near grill.
- Keep grill area clear and free from materials that burn.
- Do not block holes in bottom or back of grill.
- Check burner flames regularly.
- Use grill only in well-ventilated space. NEVER use in enclosed space such as carport, garage, porch, covered patio, or under an overhead structure of any kind.
- Do not use charcoal or ceramic briquets in a gas grill. (*Unless briquets are supplied with your grill.)*
- **Use grill at least 3 ft. from any wall or surface.** Maintain 10 ft. clearance to objects that can catch fire or sources of ignition such as pilot lights on water heaters, live electrical appliances, etc..

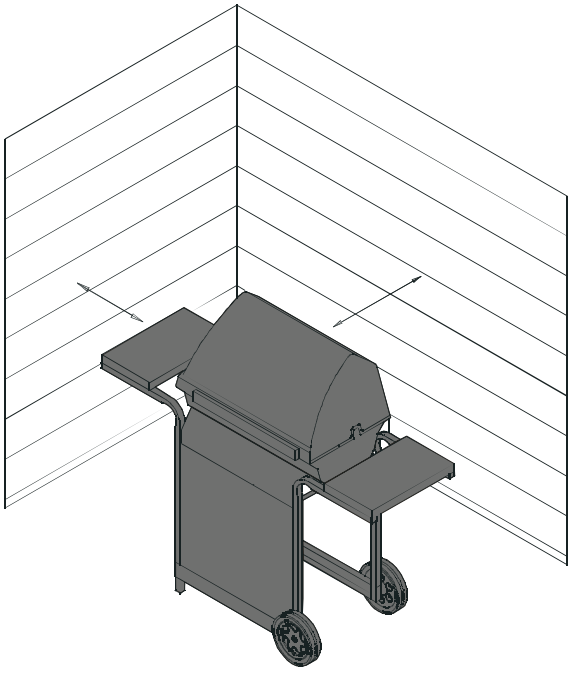

- **Apartment Dwellers:**

  Check with management to learn the requirements and fire codes for using a gas grill in your apartment complex. If allowed, use outside on the ground floor with a three (3) foot clearance from walls or rails. Do not use on or under balconies.
- **NEVER attempt to light burner with lid closed. A buildup of non-ignited gas inside a closed grill is hazardous.**

Safety Tips

▲ When grill is not in use, turn off all control knobs and gas source.

▲ Never move grill while in operation or still hot.

▲ Use long-handled barbecue utensils and oven mitts to avoid burns and splatters.

▲ Maximum load for sideburner and side shelves is 10 lbs.

▲ The grease cup **must** be attached to grease tray and emptied after each use. Do not remove grease cup until grill has completely cooled.

▲ If you notice grease or other hot material dripping from grill onto valve or gas hose, turn off gas source at once. Determine the cause, correct it, then clean and inspect valve and hose before continuing. Perform a leak test.

▲ If you have a grill problem see the *"Troubleshooting Section"*.

CAUTION

- **Putting out grease fires by closing the lid is not possible. Grills are well ventilated for safety reasons.**
- **Do not use water on a grease fire. Personal injury may result. If a grease fire develops, turn knobs and gas source off.**
- **Do not leave grill unattended while preheating or burning off food residue on HI. If grill has not been regularly cleaned, a grease fire can occur that may damage the product.**

Ignitor Lighting

▲ **Do not lean over grill while lighting.**

1. **Open lid.** Turn on gas at gas source.
2. Turn LEFT knob to 🔥.
3. Push and hold Electronic Ignitor button.
4. If ignition does NOT occur in 5 seconds, turn the burner controls off, wait 5 minutes and repeat the lighting procedure.
5. Ignite center burner by turning center knob to 🔥, then ignite right burner by turning right knob to 🔥.

Lighting instructions continued on next page.

CAUTION

If burner does not light, turn knobs to OFF , wait 5 minutes and try again. If the burner does not ignite with the valve open, gas will continue to flow out of the burner and could accidently ignite with risk of injury.

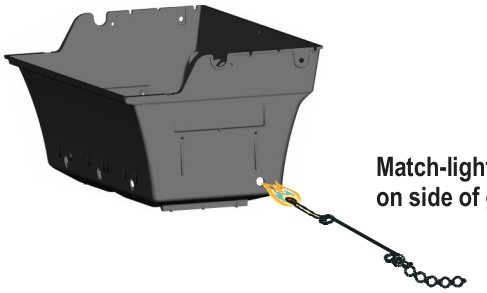

Match-Lighting

▲ Do not lean over grill while lighting.

1. **Open lid.** Turn on gas at gas source.
2. Match holder is on the right rear leg. Attach match to match holder, light match. Place match into match lighting hole from outside of grill bottom (as shown).
3. Push in and turn right knob to . Be sure burner lights and stays lit. Push in and turn center knob to and then right knob to .

Sideburner Ignitor Lighting

1. Turn gas on at LP tank.
2. Push in and turn knob to HIGH.
3. Push (up to 5 times to light burner). Be sure burner lights and stays lit.
4. If burner does not light turn knob(s) to OFF, wait 5 minutes, try again.
   Match Lighting
   1. *Turn gas on at LP tank.*
   2. *Hold lit match to any port on the burner. Push in and turn sideburner knob to HIGH.*
      Be sure burner lights and stays lit.

Burner Flame Check

- Light burner, rotate knobs from HIGH to LOW. You should see a smaller flame in LOW position than seen on HIGH. Always check flame prior to each use. If only low flame is seen refer to "Sudden drop or low flame" in the *Troubleshooting Section*.

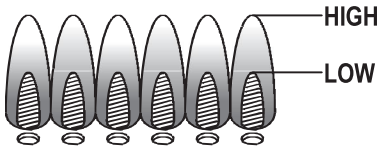

Turning Grill Off

- Turn all knobs to **OFF** position. Turn gas OFF at gas source.

Ignitor Check

- **Turn gas off at gas source.** Press ignitor button rapidly. "Click" should be heard and spark seen each time between collector box or burner and electrodes. See *"Troubleshooting"* if no click or spark.

Valve Check

- **Important: Make sure gas is off at gas source before checking valves**. Knobs lock in **OFF** position. To check valves, first push in knobs and release, knobs should spring back. If knobs do not spring back, replace valve assembly before using grill. Turn knobs to **LO** position then turn back to **OFF** position. Valves should turn smoothly.

Hose Check

- Before each use, check to see if hose is cut or worn. Replace damaged hose before using grill. Use only parts specified by manufacturer.

General Grill Cleaning

- Keep the outside of your grill looking new by cleaning it once a month with warm soap and water or a non-abrasive cleaner. If you don't have a grill cover, wipe off dust and grime before starting your grill.
- Coating the cooking grids with spray-on cooking oil will keep the food from sticking and make clean up easier. After cooking, scrape the grates with a long handled, brass wire bristle brush.
- Check inside the grill bottom for grease build-up and clean often, especially after cooking fatty meat.
- Do not mistake brown or black accumulation of grease and smoke for paint. Interiors of gas grills are not painted at the factory **(and should never be painted)**. Apply a strong solution of detergent and water or use a grill cleaner with scrub brush on insides of grill lid and bottom. Rinse and allow to completely air dry. **Do not apply a caustic grill/oven cleaner to painted surfaces.**
- **Vaporizer Tents:** Will eventually decompose and weaken with use. Remove from grill and tap to loosen any scaling. Brush vigorously with a wire brush to remove any additional scaling, rust or residue.
- **Plated wire grates:** Wash grates and V- bar with concentrated grill cleaner or use soap and water solution. Dry thoroughly and store indoors between cookouts.
- **Plastic parts:** Wash with warm soapy water and wipe dry. s Do not use citrisol, abrasive cleaners, degreasers or a concentrated grill cleaner on plastic parts. Damage to and failure of parts can result.
- **Porcelain grates:** Because of glass-like composition, most residue can be wiped away with baking soda/water solution or specially formulated cleaner. Use non-abrasive scouring powder for stubbom stains.

CARE AND CLEANING OF STAINLESS STEEL

Routine cleaning is necessary to preserve the appearance and corrosion resistance of Stainless Steel. The methods below are suggestions for cleaning stainless steel surfaces. Choose a cleaning method appropriate to the requirement. If you choose to use scouring powder or solvents, consult with the solvent manufacturer or supplier before use.

Before cleaning, first test any cleaning product in an inconspicuous location and consider the possibility of scratching and the potential for corrosion caused by not completely removing cleaners. Never use brushes or steel wool as they will scratch and leave particles embedded on stainless steel surfaces, which can lead to rusting. Always rub or wipe in the direction of the polish lines in the stainless steel surface, not across them. Thorough rinsing with clean water is recommended after all cleaning procedures. Dry all surfaces completely after rinsing. Be careful not to let any stainless steel cleaner come in contact with painted or plastic components as damage may occur.

Routine Care

The Char-Broil® Stainless Steel Grill Cleaner and the Thermos® Stainless Steel Grill Cleaner are good choices for routine cleaning of stainless steel surfaces. Mild stains and loose dirt and soil can also be removed with a soft cloth and clean warm water. Rinse with clean water and wipe dry.

Stubborn Stains

Stubborn stains, discoloration and possibly rust and rust pitting can occur from cooking, exposure to harsh outdoor conditions, or extreme cooking temperatures. There are many cleaning agents commercially available formulated to restore the finish of stainless steel. Obtain advice from the solvent manufacturer or supplier when choosing the appropriate cleaner for your requirement. These cleaners can be acidic. Care should be taken to avoid contact with eyes or mouth. Be careful not let any powder or solvent come in contact with painted or plastic components as damage may occur.

The chart below has been reproduced with permission from the Specialty Steel Institute of North America. For additional details regarding the care and cleaning of stainless steel, visit their website at www.ssina.com for more information. For the latest new products for the care and cleaning of stainless steel go to www.charbroil.com.

Job	Cleaning Agents*	Comments
Routine Cleaning	Warm Water, Soap, Ammonia, Detergent	Apply with sponge or soft cloth. Can be used on all finishes.
Fingerprints and Smears	3M Stainless Steel Cleaner and Polish, Arcal 20, Lac-O-Nu, Lumin Wash, O'Cedar Cream Polish, Stainless Shine	Provides barrier film to minimize fingerprints. Can be used on all finishes.
Stubborn Stains and Discoloration	3M Stainless Steel Cleaner and Polish, All chem Concentrated Cleaner, Samae, Twinkle, Cameo Copper Cleaner, Grade FFF or Grade F Italian Pumice, Whiting or Talc, Liquid Nu Steel, Copper's or Revere Stainless Steel Cleaner, Household Cleaners, Lumin Cleaner, Zud Restoro, Sta-Clean, Highlite, Allen Polish, Penny-Brite, Copper-Brite	Rub lightly, using dry damp cloth, in the direction of polish lines on the stainless steel.
Grease and Blood Burnt-on or Baked-on Foods	Scotch-Brite Power Pad 2001, Easy-Off, De-Grease-It, 4% to 6% hot solution of such agents as tri-sodium polyphosphate, 5% to 15% caustic soda solution	Excellent removal on acids, all finishes. Particularly useful where rubbing is not practical.
Grease and Oil	Any good commercial detergent or caustic cleanser.	Apply with sponge or soft cloth in direction of polish lines.

*NOTE: Use of proprietary names is intended only to indicate a type of cleaner and does not constitute an endorsement. Omission of any proprietary cleanser does not imply its inadequacy. All products should be used in strict accordance with instructions on package.

CAUTION

NATURAL HAZARD • SPIDERS

FACT: Sometimes spiders and other small insects climb into the burner tubes attached to the burners. The spiders spin webs, build nests and lay eggs. The webs or nests can be very small, but they are very strong and can block the flow of gas. Clean burners prior to use after storing, at the beginning of grilling season or after a period of one month not being used.

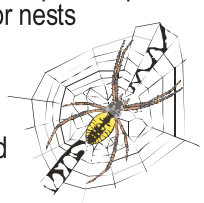

Spider guards are on the air intakes in an effort to reduce this problem, but it will not eliminate it! An obstruction can result in a "flashback" (a fire in the burner tubes). The grill may still light, but the obstruction does not allow full gas flow to the burners.

IF YOU EXPERIENCE THE FOLLOWING:

1. Smell gas.

2. Burner(s) will not light.

3. A small yellow flame from burner (should be blue).

4. Fire coming from around or behind control knob.

STOP!

Immediately turn off gas at gas source!

SOLUTION:

Wait for grill to cool.

Follow the "*Cleaning The Burner Assembly*" instructions. Clean burners often. Use a 12" pipe cleaner to clean out the burner tubes. You may also force a stream of water from a hose nozzle through burner tubes to clean them.

Repainting Your Grill

- After extended use and exposure to weather, paint on grill may change color slightly or become spotted. Although this detracts from grill's appearance, it will not impair its performance.
- To refinish your grill brush outside of grill lid and bottom with wire brush and lightly sand with fine grit sandpaper. Sanding allows new paint to adhere more easily. Wash grill lid and bottom with soap and water to remove dust and grease. Do not use a grill cleaner on outside of grill. Wipe with vinegar. Refinish outside with heat-resistant paint. Do not paint inside of grill.

Storing Your Grill

- Clean cooking grates.
- Store in dry location.
- Cover grill if stored outdoors. Choose from a variety of grill covers offered by manufacturer.
- Store grill indoors ONLY if gas source is disconnected.
- When removing grill from storage, follow "*Cleaning the Burner Assembly*" instructions before starting grill.

Cleaning The Burner Assembly

Follow these instructions to clean and/or replace parts of burner assembly or if you have trouble igniting the grill.

1. **Turn gas off at control knobs and LP tank.**
2. Remove cooking grids and vaporizer tents.
3. Remove two pal nuts, carry-over tube and burners.
4. Under grill remove grease pan and tray. Clean with soap and water.
5. Disconnect battery and under console disengage ignitor wire.
6. Wipe ceramic electrode with rubbing alcohol and cloth.
7. Clean carry-over tube and burners exterior with soap and water. Lay burners on flat surface, insert garden hose (preferably with nozzle), into burner tubes forcing water through tubes. Make sure water comes out of every porthole. Open clogged portholes with a thin wire. **Shake out excess water** and examine porthole. Due to normal wear and corrosion some portholes may become enlarged, if so replace burner. If any horizontal cracks appear from porthole to porthole or large holes (other than portholes) are found replace burner.
8. If grill is to be stored, coat burners lightly with cooking oil. Wrap in protective cover to keep insects out. If not storing use following steps.

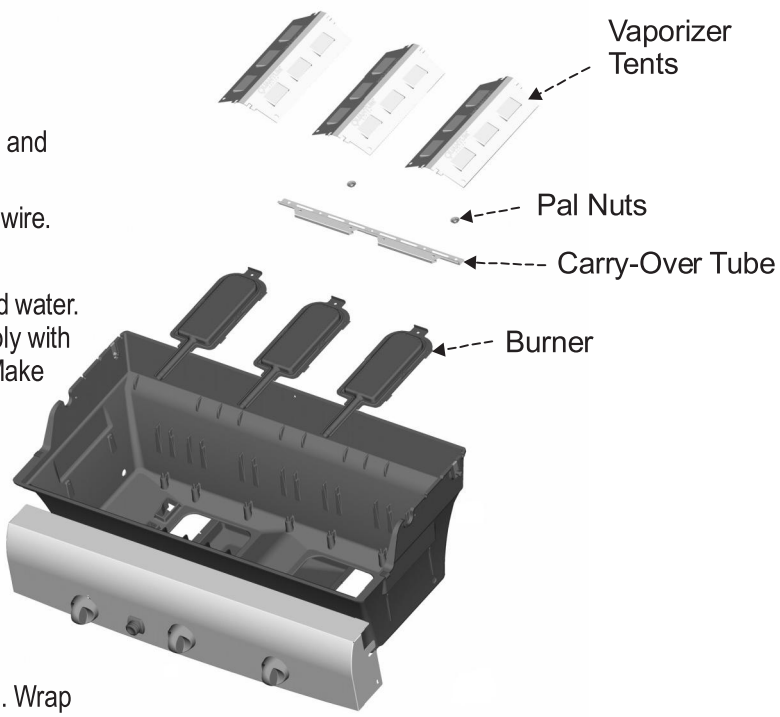

VERY IMPORTANT: Burner tubes must engage valve openings as shown (A).

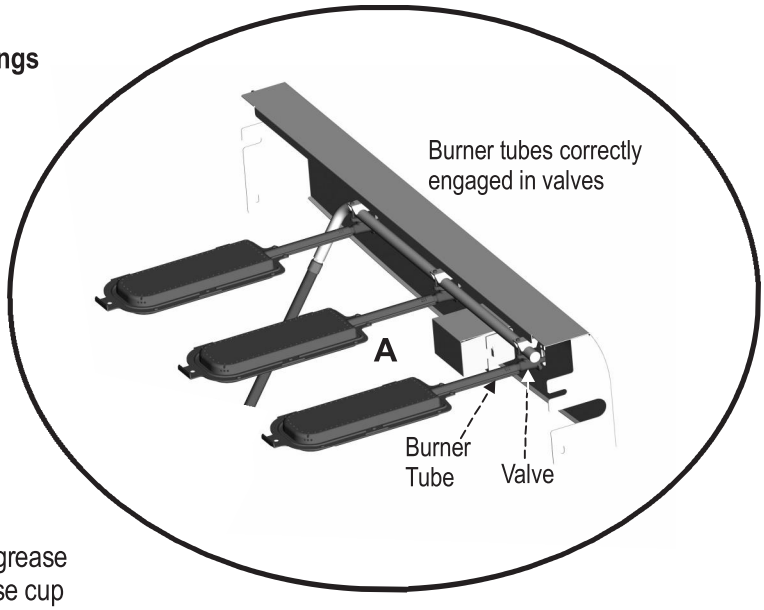

9. Attach ignitor wire to electrode. *Replace battery.*
10. Reposition cooking grids and vaporizer tents. Place clean grease tray and pan into grill bottom.
11. Before cooking again on grill, perform a *"Leak Test"* and *"Burner Flame Check"*.

▲ Do not use ceramic briquets or charcoal in your grill.

Cleaning the Grease Tray

Performance Series grills are equipped with a removable grease tray. Although grease will drain from the grease tray to the grease cup provided, food particles and debris may accumulate in the bottom and should be removed after cooking 5 to 10 times. This can easily be done by sliding the grease tray out of the rear of the unit. Make sure in replacing the tray to push it all the way forward.

CAUTION

- **Handles close to the lid can become hot. Lift handle in the middle where it remains cool.**

Food Safety

- Food safety is a very important part of enjoying the outdoor cooking experience. To keep food safe from Harmful bacteria, follow these four basic steps:

Clean: Wash hands, utensils and surfaces with hot soapy water before and after handling raw meat and poultry.

Separate: Separate raw meats and poultry from ready-to-eat foods to avoid cross contamination. Use a clean platter and utensils when removing cooked foods.

Cook: Cook meat and poultry thoroughly to kill bacteria. Use a thermometer to ensure proper internal food temperatures.

Chill: Refrigerate prepared foods and leftovers promptly.

For more information call: USDA Meat and Poultry Hotline at 1-800-535-4555 in Washington, DC (202) 720-3333, 10:00 am-4:00 pm EST

How To Tell If Meat Is Grilled Throughly

- Meat and poultry cooked on a grill often browns very fast on the outside. Use a meat thermometer to be sure food has reached a safe internal temperature, and cut into food to check for visual signs of doneness.

- Whole poultry should reach 180^{0}F; breasts 170^{0}F. Juices should run clear and flesh should not be pink.

- Hamburgers made of any ground meat or poultry should reach 160^{0}F, and be brown in the middle with no pink juices. Beef, veal and lamb steaks, roasts and chops can be cooked to 145^{0}F. All cuts of pork should reach 160^{0}F.

- NEVER partially grill meat or poultry and finish cooking later. Cook food completely to destroy harmful bacteria.

- When reheating takeout foods or fully cooked meats like hot dogs, grill to 165^{0}F, or until steaming hot.

Certified Grill Parts And Accessories®, Char-Broil and Design®, Char-Broil (Gas Grill Briquettes)®, Char-Diamonds®, Cooking Zone and Design®, Diamond Flame®, Executive Chef®, Faststart®, Flare Fighter®, FlavorMaster®, Gas Grill Silouette and Design®, H2O Smoker®, Lava Flame®, MasterFlame®, MasterFlame Precision Cooking System®, PowerSpark®, Quantum®, PrecisionFlame and Design®, Sierra® and TruFlame® are registered Trademarks of the W.C. Bradley Company. Thermos® is a registered trademark of the Thermos Company and its affiliates.

Artisan Collectiion by Char-Broil™, C3 and Design™, Char-Broil and Design™, Flame Design™, FlavorTents™, Grill 2 Go™, Grillin' Stick™, Keeper of the Flame™, Keepers of the Flame™, Natural Grip™, Outdoor Cooking Collection and Design™, Patio Bistro™, PrecisionFlame™, Pro-Check™, QuickSet Grills and Design™, SmokerTents™, The Big Easy™. The Minute Grill™, The Edge™, The Tuscan Collection™, and The Urban Grill™ are Trademarks of the W.C. Bradley Company. Universal Grill Parts and Design™ is a trademark of the Thermos Company and its affiliates.

Protected under one or more of the following U.S. Patents: 4,598,692; 4,624,240; 4,747,391; 4,817,583; 4,924,846; 4,989,579; 5,003,960; 5,076,256; 5,076,257; 5,090,398; 5,109,834; 5,224,676; 5,277,106; 5,421,319; 5,441,226; 5,452,707;5,458,309; 5,566,606; 5,579,755; 5,582,094; 5,613,486; 5,649,475; 5,706,797; 5,711,663; 5,765,543; 5,931,149; 5,996,573; 6,095,132; 6,135,104; 6,173,644; 6,279,566; 6,397,731; 6,418,923;6,439,222; 6,523,461; 6,792,936; 6,935,327; D282,619; D339,714; D341,292; D343,337; D358,059; D361,466; D364,535; D372,637; D373,701; D377,735; D383,035; D397,910; D405,643; D405,643; D406,005; D406,009; D413,043; D413,229; D414,982; D415,388; D416,164; D416,441; D417,587; D422,516; D423,274; D423,876; D428,303; D435,396; D463,004; D438,059; D438,060; D438,427; D439,110; D442,505; D443,179; D443,354; D447,384; D447,385; D447,909; D448,610; D448,614; D448,615; D448,616; D448,975; D449,492; D451,759; D456,202S; D460,313; D461,359; D477,501and D504,048. Canada: 87743; 87744; 92607; 92608 and 1,316,424. Other Patents Pending.

©2006 W. C. Bradley Co., All Rights Reserved.

Cooking Chart

Cooking times and temperatures may vary according to specific recipes, cooking conditions or barbecue equipment used. Take these factors into consideration to insure best results. If you use the indirect cooking method (indirect cooking is lighting only one burner and placing food on opposite side of cooking grate), allow more grilling time.

Temperatures: High = 650°F / Medium = 450°F / Low = 300°F.

Food	Setting	Cooking Time
Beef		
Hamburger 1/2" thick	Medium	Med: 7-10 min. / Well done: 10-15 min.
Steak 1/2"	Medium-Hot	Rare: 3-6 min. / Med: 6-9 min. / Well done: 9-12 min.
Roast	Low	Rare: 18-22min. per lb. / Med: 22-28 min. per lb. / Well done: 28-32 min. per lb.
Pork		
Chops 1/2"	Medium	Well done: 15-20 min.
Ribs 5-6 lbs.	Low-Medium	Well done: 45-90 min.
Roast 3-5 lbs.	Low-Medium	Well done: 18-23 min. per lb.
Ham Steak 1/2"	Medium-Hot	12-15 min.
Ham 5 lb. fully cooked	Low-Medium	20 min. per lb.
Lamb		
Chops 1/2"	Medium	6-12 min.
Poultry		
Chicken 2-1/2 to 3-1/2 lbs.	Low	1 hr., 15 min. to 1 hr., 30 min.
Chicken halved or quertered	Low	40-60 min.
Turkey	Low-Medium	18-20 min. per lb.
Seafood		
Steaks 1" thick	Medium-Hot	Well done: 10-25 min.
Fillets 6-8 oz.	Medium-Hot	8-12 min.
Shrimp large or jumbo	Low-Medium	8-12 min.
Venison		
Steak 1" thick	Medium	Rare: 8-10 min. / Med: 10-12 min.
Burgers 1/2"	Medium	Rare: 10-12 min. / Med: 12-15 min.
Roast 3-4 lbs.	Low-Medium	Rare: 20-22 min. per lb. / Med: 22-25 min. per lb.
Vegetables		*Wrap vegetables in foil*
Baking Potato whole	Low	55-60 min.
Onions whole	Low	45 min.
Tomatoes half	Medium	30-40 min.
Corn whole	Low	35-45 min.
Mushrooms	Medium	15-20 min.

PARTS LIST – Model No. 463460406

Key	Qty.	Description	Part #
A	1	Bottom Shelf	7000506
B	4	Rails	7000285
C	1	Top Casting	7000557
D	1	Bottom Casting	7000559
E	3	Burners	7000083
F	1	Carryover Tube	7000279
G	2	Pal Nuts	7000132
H	2	Casting Bumpers	7000184
I	1	Handle	7000189
J	1	Handle Cap, Right	7000192
K	1	Handle Cap, Left	7000193
L	1	Fascia, Left	7001021
M	2	Wheels	7000262
N	1	Axle Rod	7001149
O	3	Vaporizer Tents	7000381
P	1	Grease Tray Assy	7000043
Q	1	Grease Pan	7000046
R	1	Sideburner Burner	7000036
S	2	Leg Extenders	7000230
T	4	Control Knobs	7000237
U	1	Logo Plate Assy	4157147
V	1	Temperature Gauge	7000361
W	1	Temperature Gauge Bezel	4157169
X	1	Electrode	7000378
Y	1	Ignition Button	7000161
Z	2	“U” Nuts	7000185

Key	Qty.	Description	Part #
AA	1	Sideburner Body	7000563
BB	1	Sideburner Handle	7000059
CC	2	Washer Head Hex Nuts	7000271
DD	1	Shelf	7000258
EE	1	Sideburner Grate	4156376
FF	1	Front Panel	7001296
GG	1	Warming Rack	7000181
HH	1	Cook Grid, 8x15	7000027
II	2	Cook Grids, 12x15	7000028
JJ	1	12’ Natural Gas Hose	4158033
KK	2	#10-24x3/8 Self-Tap Screw	7001017
LL	1	Valve/Manifold Assy	7000013
MM	1	Control Panel	7001298
NN	1	Ignition Module	7000944
OO	1	24” Ignitor Wire	7000894
PP	1	Leg Assembly, Long	7000522
QQ	1	Leg Assembly, Short	7000523
RR	1	Match Holder w/Chain	7000364
SS	1	Push Pin	4080112
TT	1	Hose Heat Shield	7000388
- -	1	Hardware Bag	7001295

PARTS DIAGRAM – Model No. 463460406

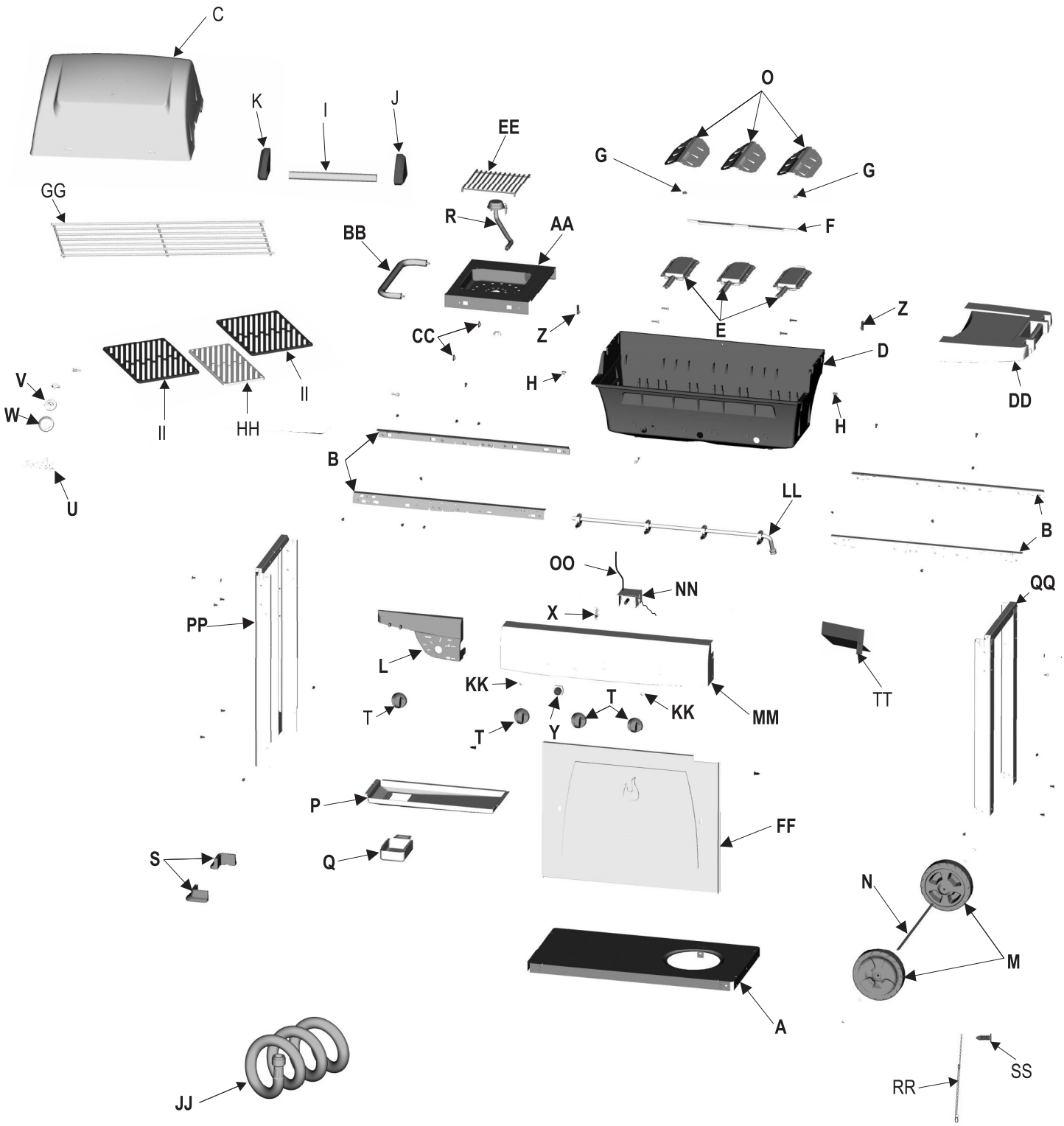

ASSEMBLY – Model No. 463460406

1

Items to Assemble
1 Long Leg Assembly
1 Short Leg Assembly
8 Screws

A Place bottom shelf on table or grill container.
B Insert tabs on long leg assembly into bottom shelf.
C Attach leg assembly with one screw on each side.
D Repeat step B and C for short leg assembly.

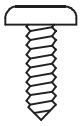

Qty: 8

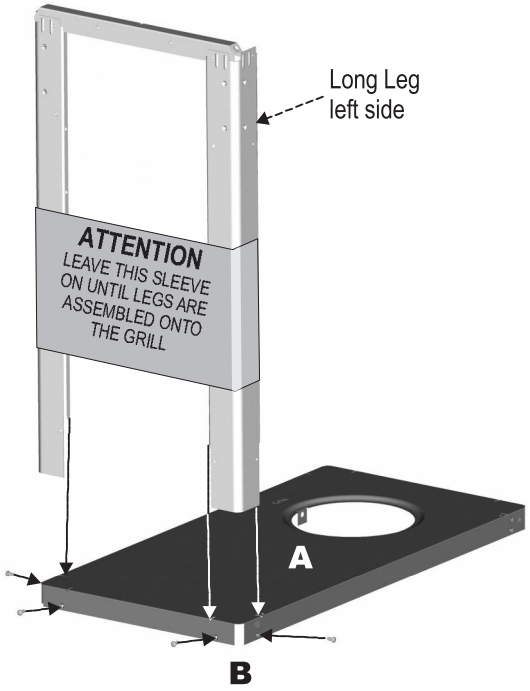

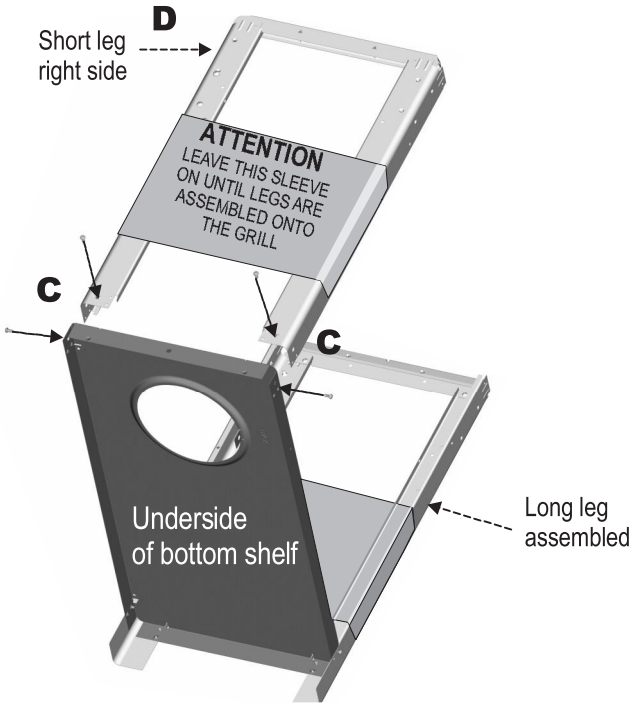

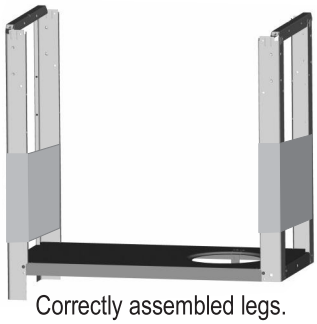

Correctly assembled legs.

2

Items to Assemble
2 Leg Extenders
2 Wheels
1 Axle Rod
2 Flat Washers
1 Hitch Pin

A Attach leg extenders. Check to make sure leg is seated all the way into the leg extender.
B Slide wheel on axle rod. Insert axle rod/wheel into large hole in bottom shelf. Attach other wheel with two washers and a hitch pin.

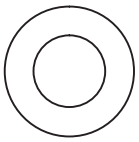
Qty: 2

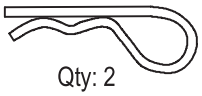
Qty: 2

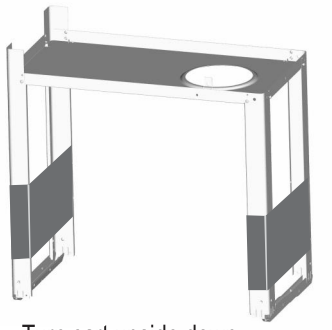
Turn cart upside down

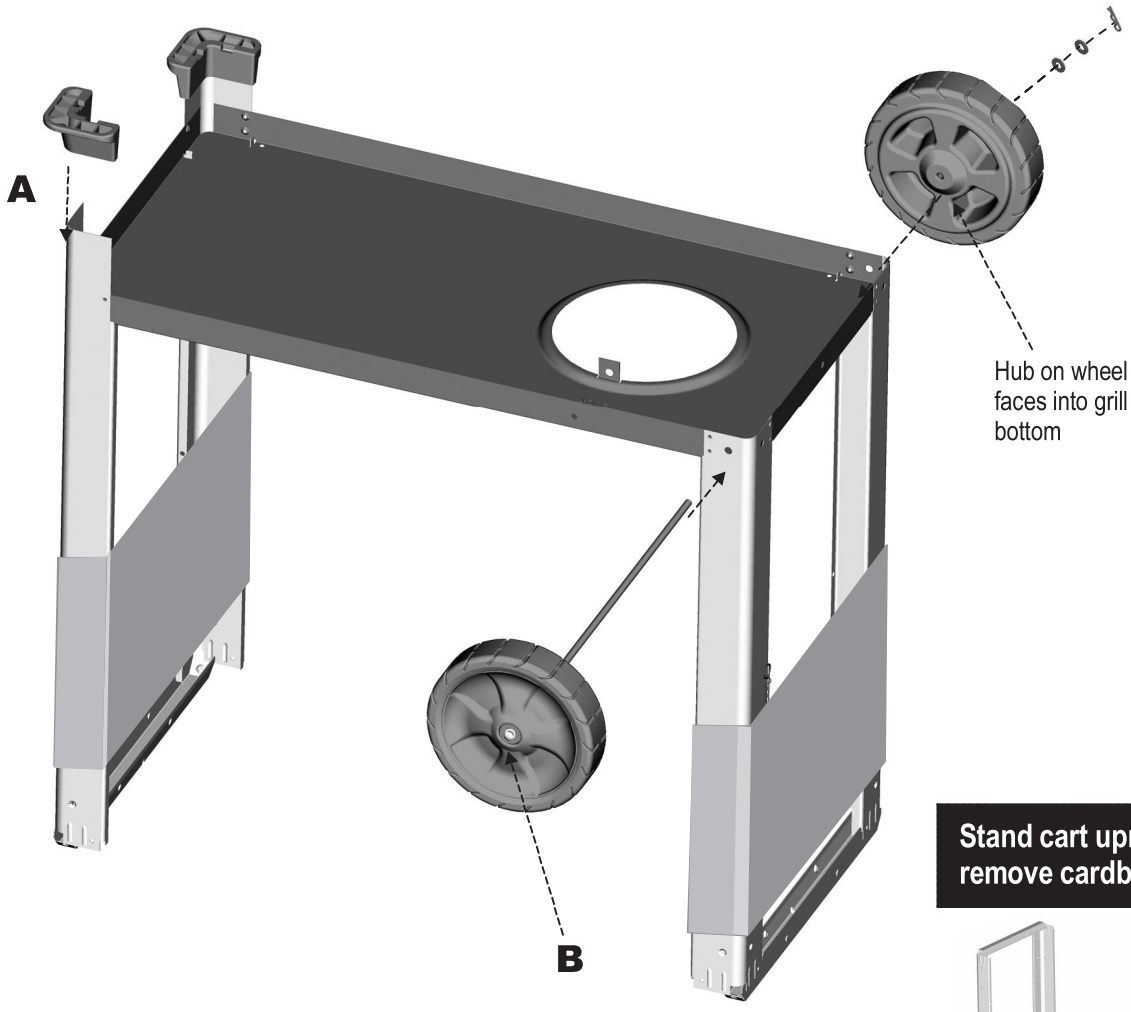

Stand cart upright and remove cardboard sleeves

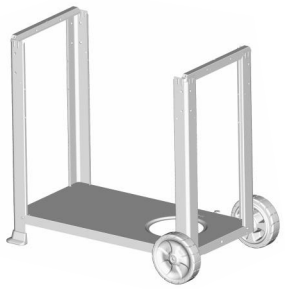

3

Items to Assemble
4 Rails (all identical)
10 Screws

A Overlap rails and hook tabs into slots. Pull rails to latch.
B Attach one screw in center of each rail.
C Attach rail and legs with two screws in each corner.

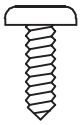
Qty: 10

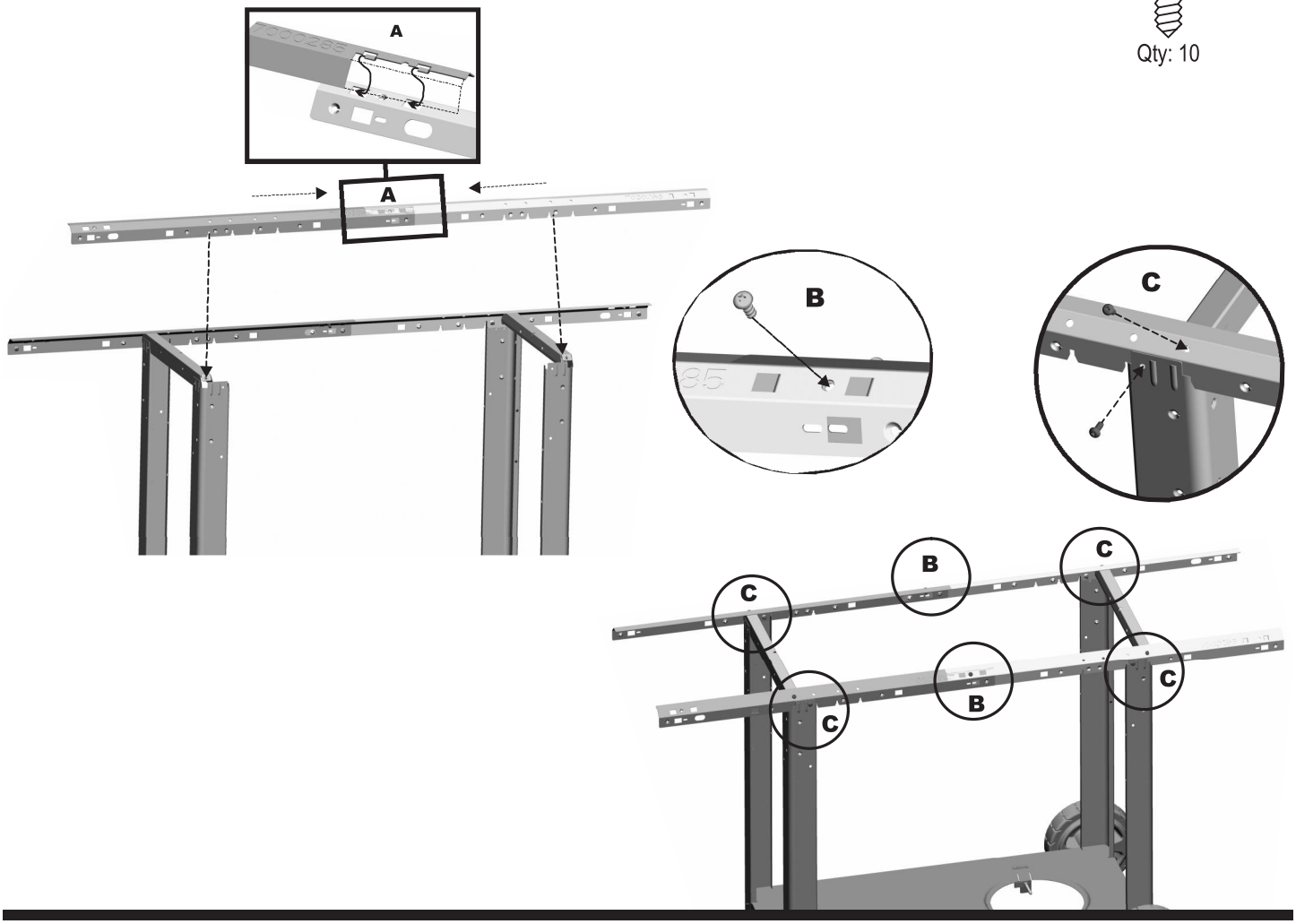

4

Items to Assemble
1 Front Panel
2 Push Pins

A Place tabs on front panel beside leg tabs.
B Insert push pins into front panel and legs.

Qty: 2

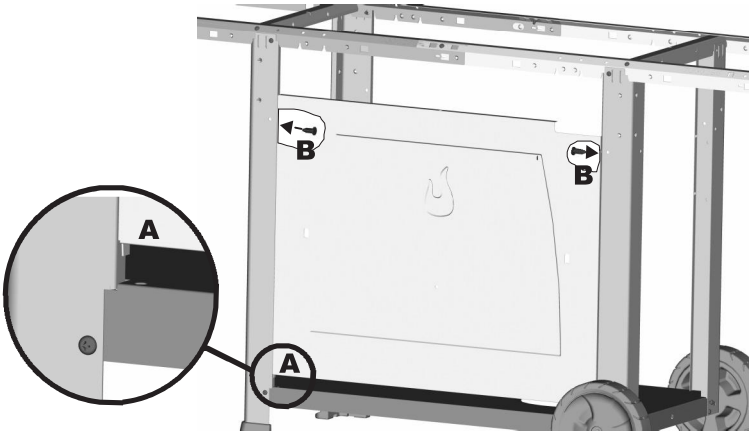

5

Items to Assemble
1 Hose Heat Shield
1 Screw

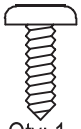

Qty: 1

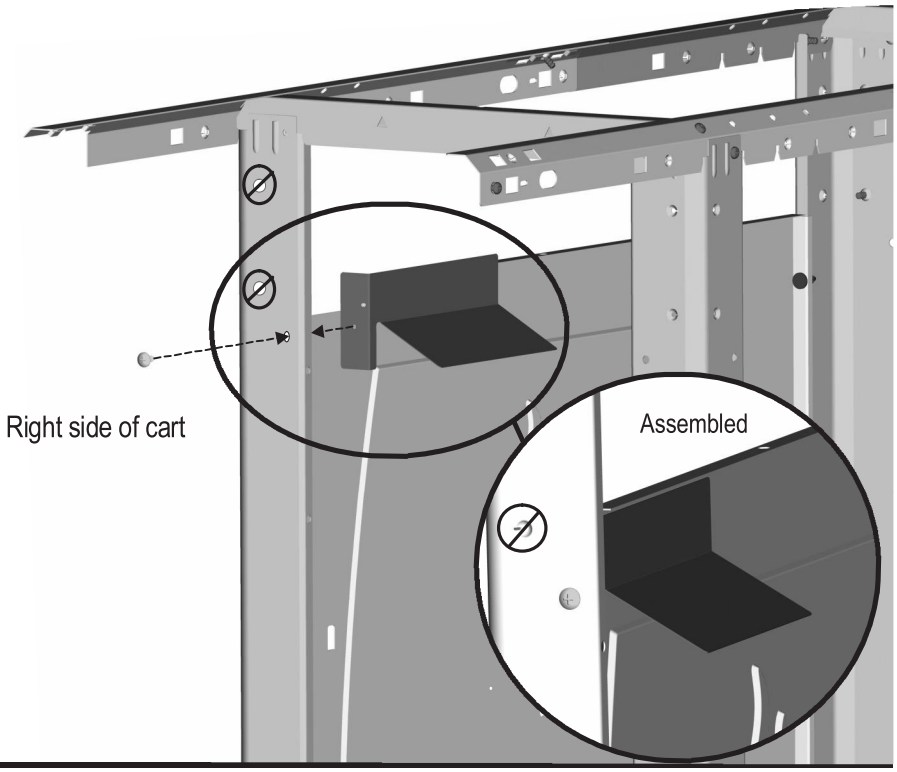

6

Items to Assemble
1 Grill Bottom Assembly
4 Screws

A Angle grill bottom assembly around and under the rails. **CAUTION: Be careful not to dislodge burner tubes.**
B Make sure ribs on each side of bottom casting are nestled into notches on casting seat.
C Attach four screws inside grill bottom and into casting seat.

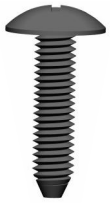

Qty: 4

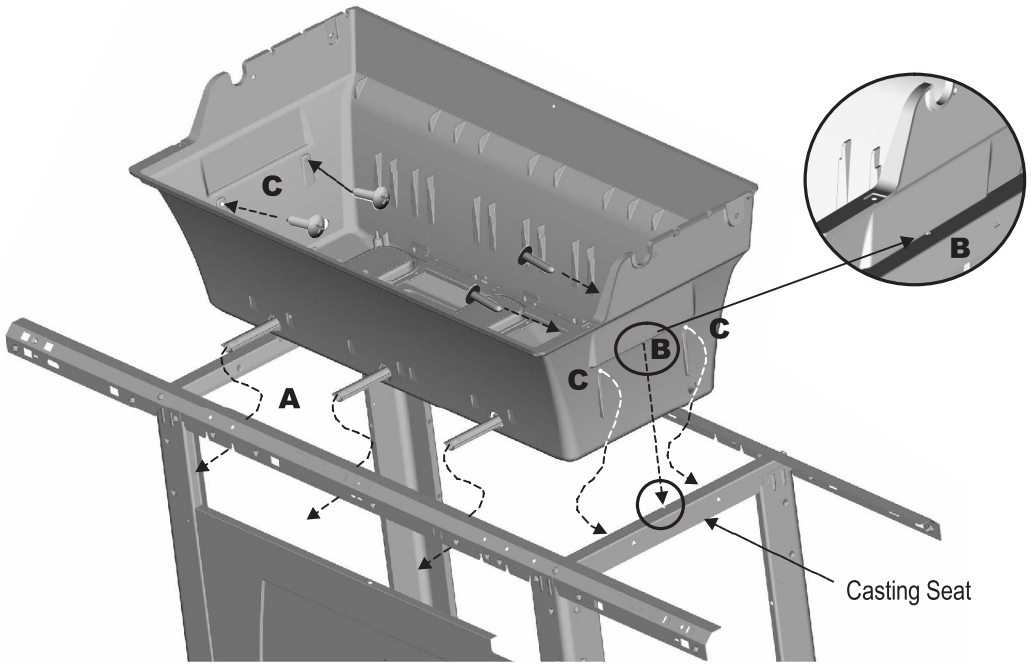

7

Items to Assemble:
2 U-Nuts

A Place u-nut as shown into indent on left and right side of grill bottom.

Qty: 2
Not to scale

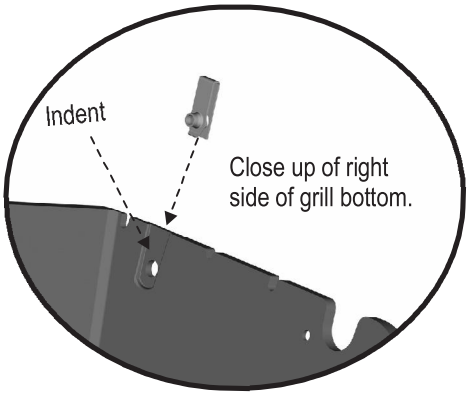

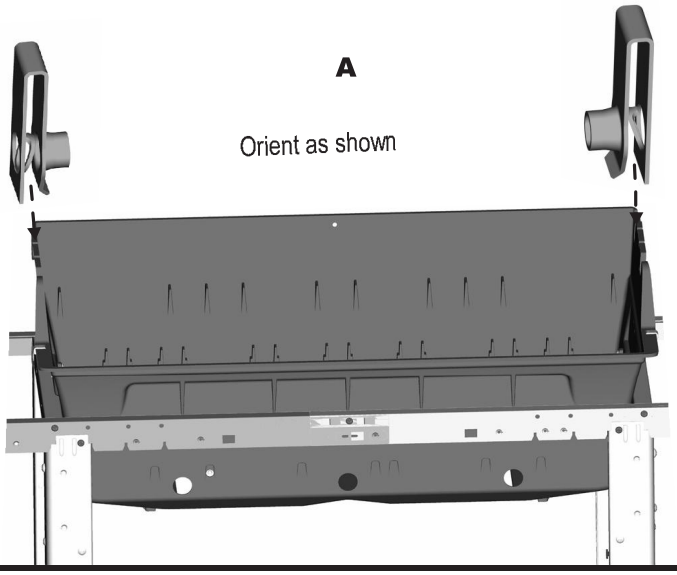

8

Items to Assemble
1 Electrode w/Wing Nut or Nut

A Inside bottom casting insert electrode and finger tighten with wing nut or nut.

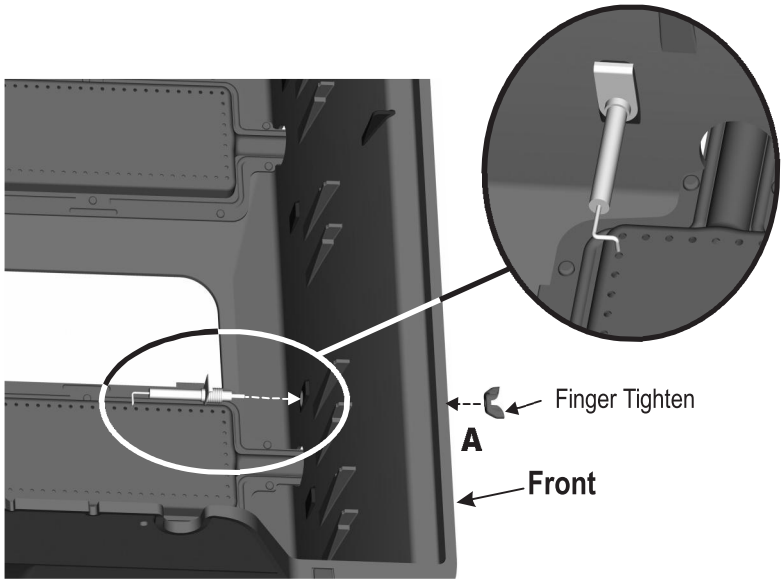

View of electrode attached and aligned with a porthole in the burner.

9

Items to Assemble
1 Control Panel
3 Screws

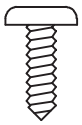

Qty:3

Loosen long wire and place behind front panel. Do not connect at this time.

A Hold control panel close to bottom casting. Attach short ignitor wire to electrode.

B Position valves into burner tubes (see burner-valve view). Rotate control panel up and rest flange over rail.

C Attach control panel to legs with a screw in top hole on each leg. On the right side attach a screw in second hole.

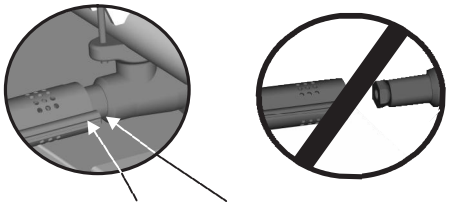

Correctly assembled burner tube and valve.

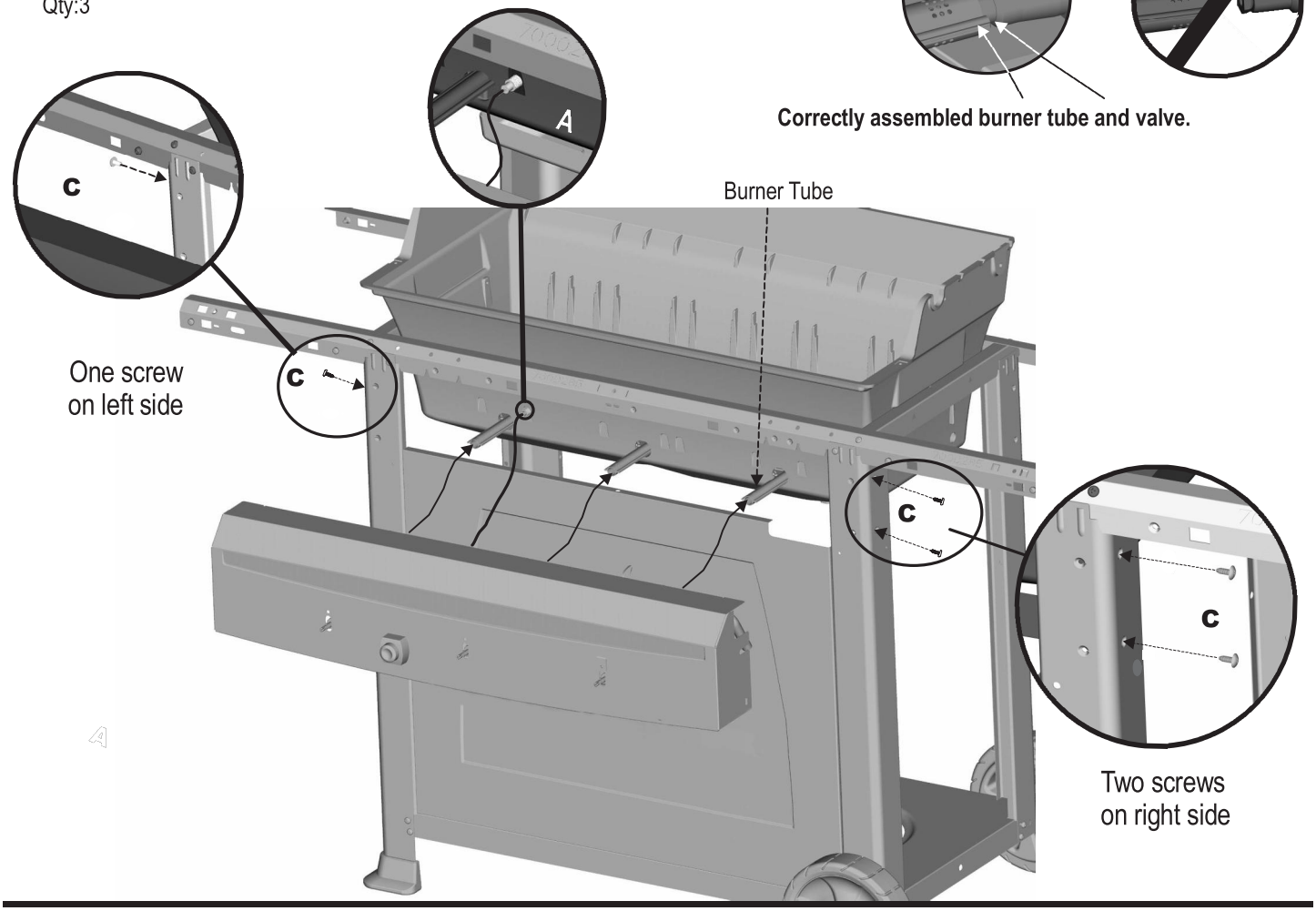

10

Items to Assemble
1 Shelf

A Shows a close up of the rectangle hole that holds the shelf in place. Press side shelf firmly onto the rails until it is fully secured to the rails.

B Shows shelf properly attached.

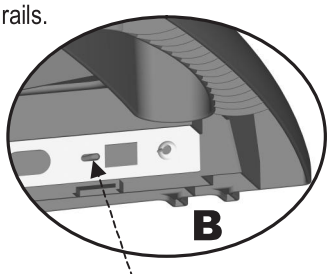

Tab fully secured

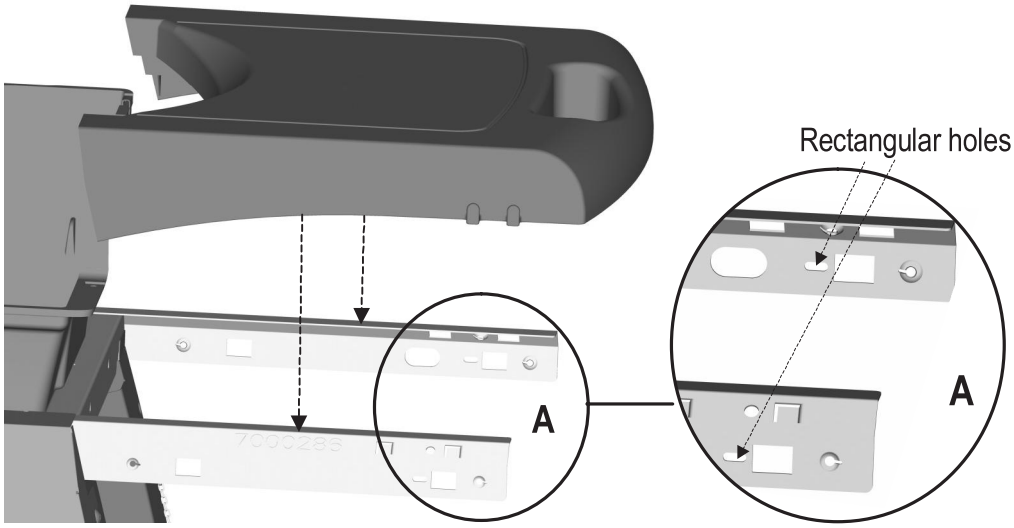

11

Items to Assemble
1 Sideburner Assembly
4 Screws
1 Sideburner Burner
1 Wing Nut
1 Sideburner Grate

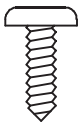

Qty: 4

Qty: 1

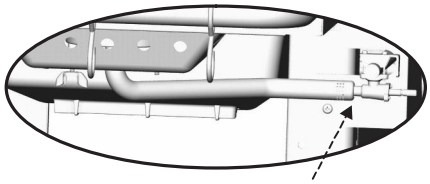

Sideburner tube and valve properly engaged.

A Slide sideburner assembly onto rails. Attach with 4 screws.
B Insert sideburner burner into sideburner body. Make sure valve fits into tube before attaching wing nut to sideburner burner.
C Place sideburner grate onto sideburner body.

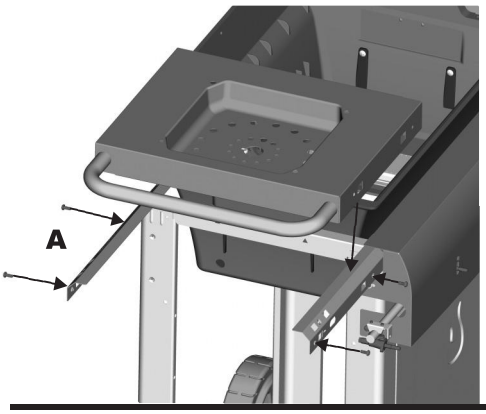

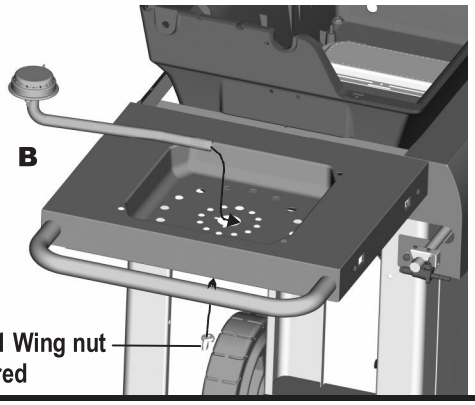

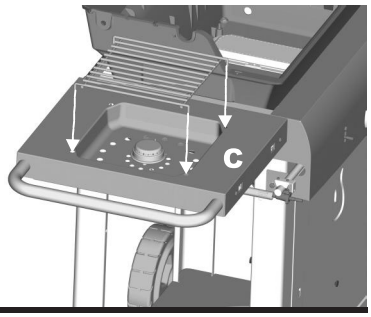

12

Items to Assemble
1 Fascia
1 Screw

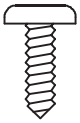

Qty: 1

A Insert tabs on fascia into 2 slots on sideburner assembly. Fasten fascia into second hole through control panel and leg.
B Attach long wire from electrode ignition module to electrode beneath sideburner.

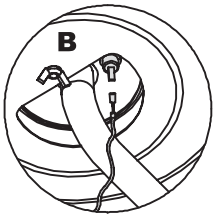

Caution:
If there is a plastic sleeve on the sideburner electrode, remove it before connecting the long wire.

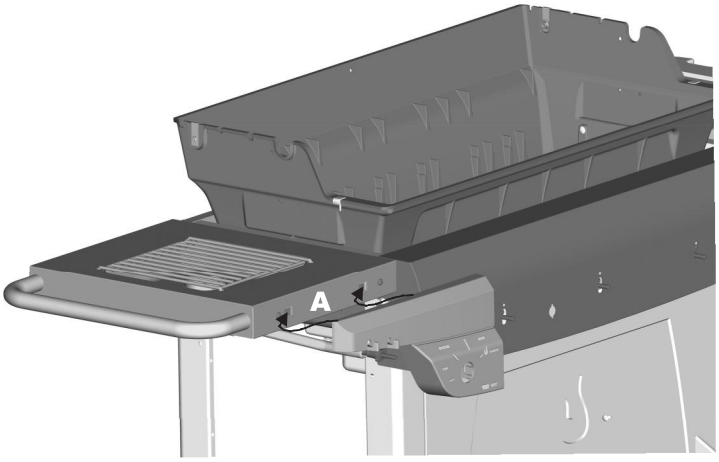

Looking underneath sideburner

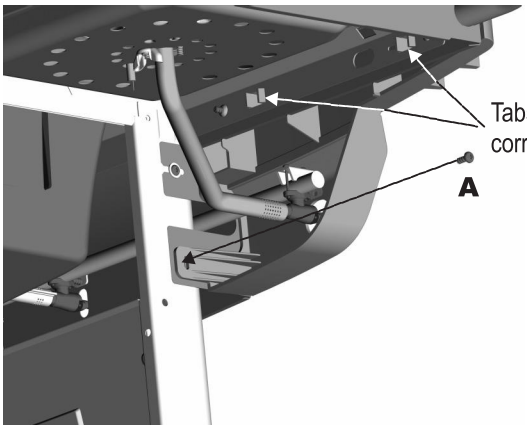

13

Items to Assemble:
1 Handle
1 Handle Cap, Right
1 Handle Cap, Left
2 Wing Nuts

A Vents in handle face towards top casting.
B Place right handle cap with one slot on right side of handle and left handle cap with two slots on left side. Fasten to top casting with two wing nuts.

Qty: 2

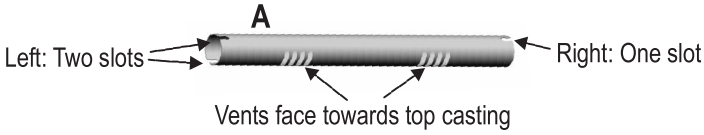

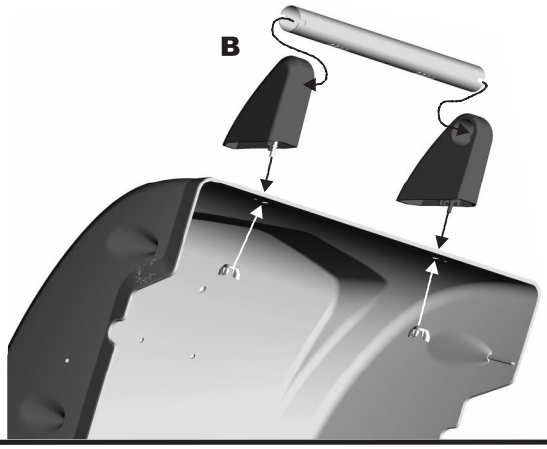

14

Items to Assemble:
1 Top Casting
2 Shoulder Bolts
4 Control Knobs
1 Ignition Button
1 AAA Battery

A Attach top casting with shoulder bolts.
B Insert + side of battery into ignitor module. Note correct position to hold ignitor button. Push on button once to engage seal.
If back of button looks like C. Push button onto ignitor module and turn right 1/4 turn to lock in place.
D Place knobs on valve stems.

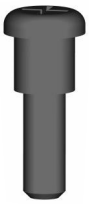

Qty. 2

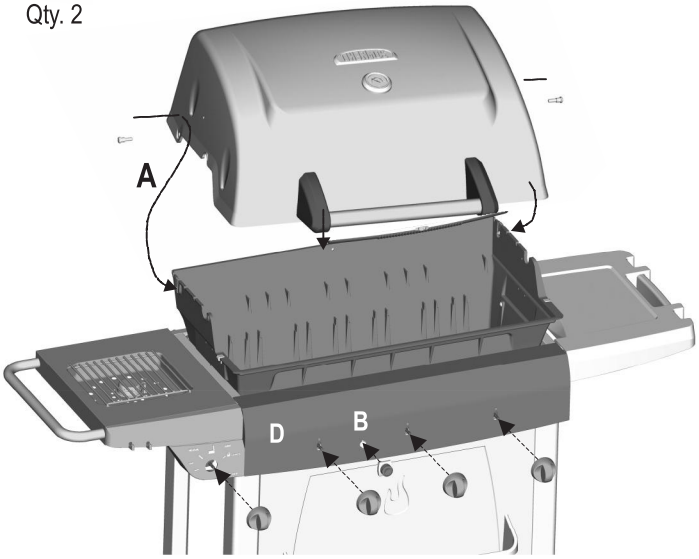

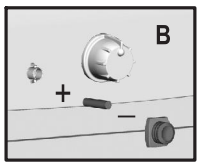

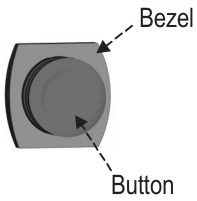

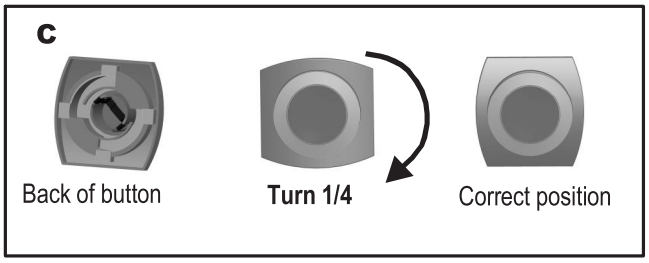

Instructions to assemble logo plate, bezel and temperature gauge if not already assembled.

Items to Assemble
1 Logo Plate
1 Bezel
1 Temperature Gauge or
1 Temperature Gauge w/Wing Nut

A Insert logo plate into grill lid.
B Center bezel over large hole on grill lid.
C Insert temperature gauge into hole on bezel and grill lid. Gently press temperature gauge down to engage.
D *If your grill came with a temperature gauge and wing nut. Insert temperature gauge into hole on bezel and grill lid, attach with win nut.*
Note: Do not put bezel on temperature gauge and then place on grill lid. This may damage the locking device on the temperature gauge.

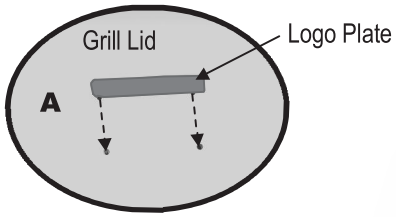

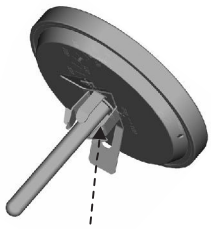

Back side of Temperature Gauge showing locking device.

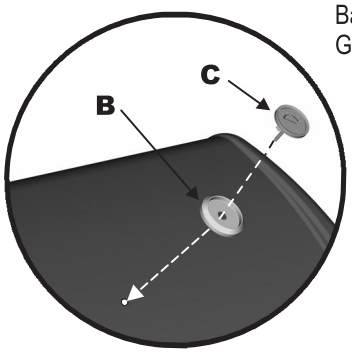

Qty:1

15

Items to Assemble:
3 Vaporizer Tents
3 Grates
1 Warming Rack

A Note correct position of vaporizer tents directly over burners.
B Place grates as shown.
C Place warming rack in slots on bottom casting.

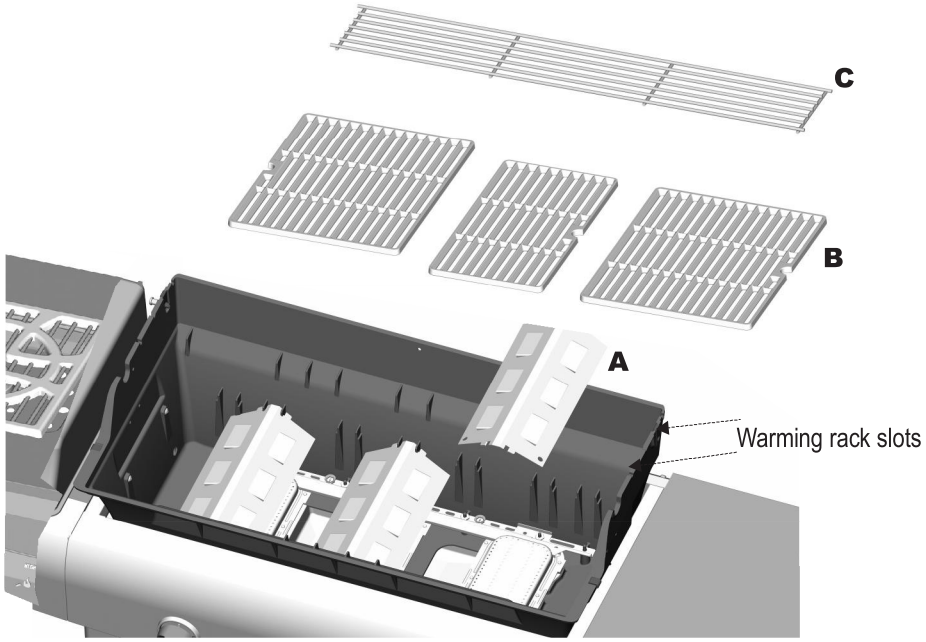

16

Items to Assemble
1 Grease Tray Assembly
1 Grease Pan

A Slide grease tray into brackets on bottom casting.
B Slide grease pan into brackets on grease tray.

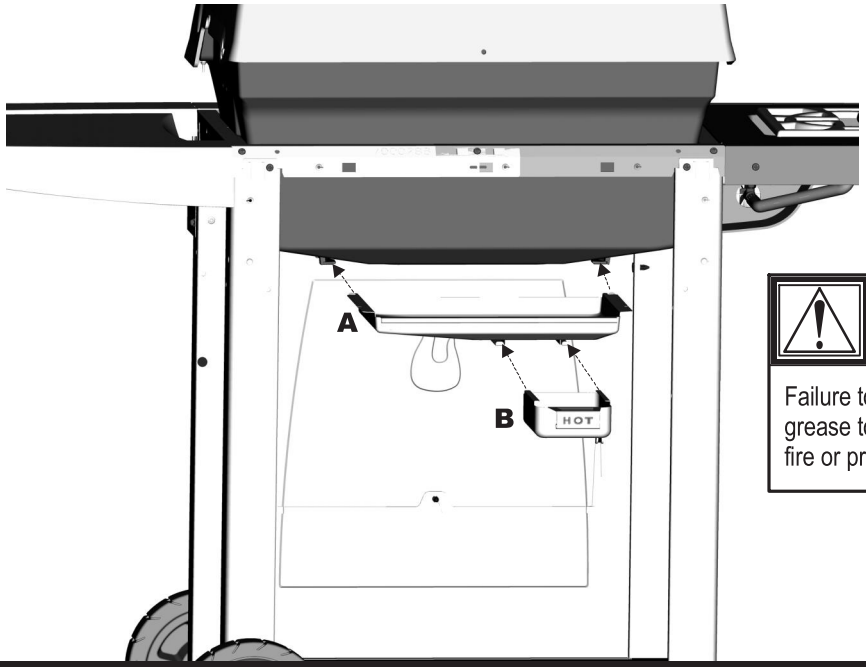

CAUTION

Failure to install the grease tray will cause hot grease to drip from bottom of grill with risk of fire or property damage.

17

Items to Assemble
1 12' Natural Gas Hose

A Beneath control panel, thread the natural gas hose onto the valve assembly and wrench-tighten the connection.

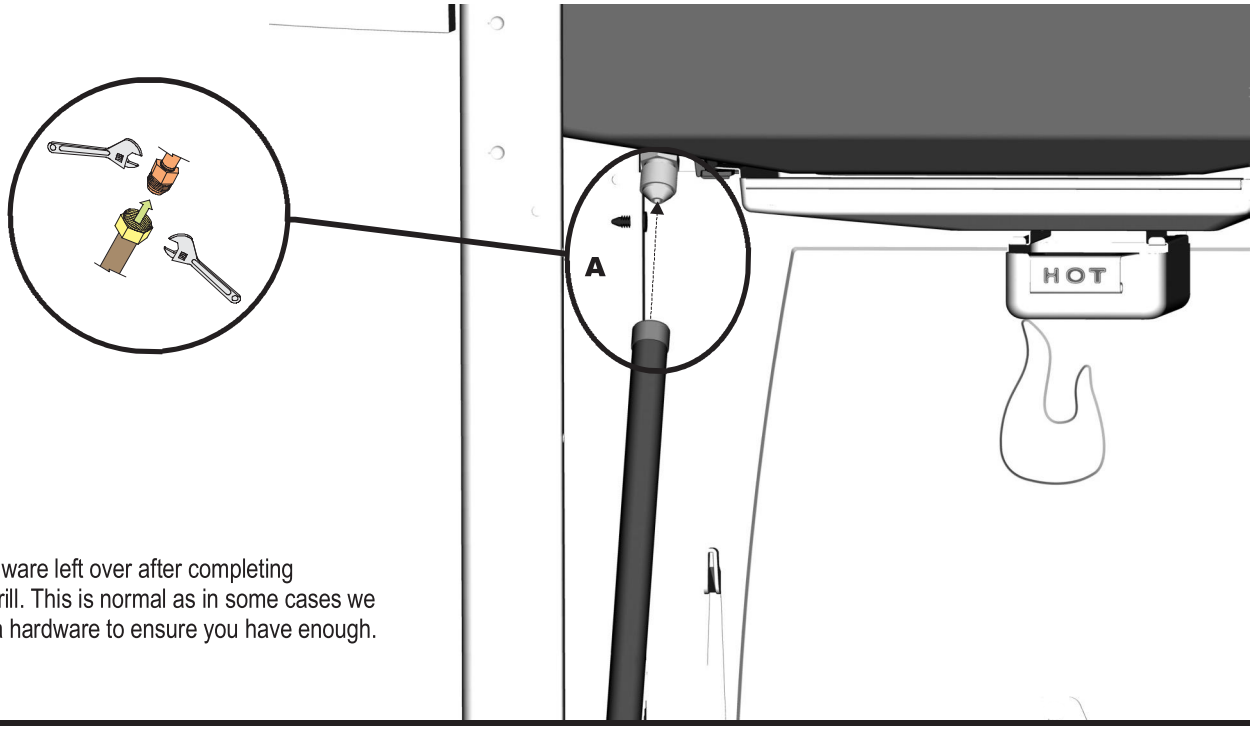

You may have hardware left over after completing assembly of your grill. This is normal as in some cases we have included extra hardware to ensure you have enough.

See Use & Care section for important safety instructions. Please read "Connecting Your Grill to the Natural Gas Source", "Leak Test", and "Burner Flame Check" before using grill.

Troubleshooting - Electronic Ignition

Problem (Ignition)	Possible Cause	Check Procedure	Prevention/Solution
SECTION I No sparks appear at any electrodes when ignition button is pushed; no noise can be heard from spark module.	• Battery not installed properly.	• Check battery orientation.	• Install battery (make sure that "–" and "+" connectors are oriented correctly, with "–" end up and "+" end down.)
	• Dead battery.	• Has battery been used previously?	• Replace battery with new AAA-size alkaline battery.
	• Button assembly not installed properly.	• Check to ensure button assembly is fully engaged. Button should travel up and down without binding.	• Remove button cap assembly and reinstall, making sure it can be fully engaged.
	• Faulty spark module.	• If no sparks are generated with new battery and good wire connections, module is faulty.	• Replace spark module assembly.
SECTION II No sparks appear at any electrodes when ignition switch is pushed; noise can be heard from spark module.	• Output lead connections not connected.	• Are output connections on and tight?	• Remove and reconnect all output connections at module and electrodes.
	• Electrode tip not in proper position.	• Are the electrode tips pointing in the right direction? Is the gap too big?	Main Burners: • Tip of electrode should be pointing toward port hole in burner. The distance should be 1/8" to 3/16". Adjust if necessary. Sideburner: • Tip of electrode should be pointing toward gas port opening on burner. The distance should be 1/8" to 3/16". Adjust if necessary.
SECTION III Sparks are present but not at all electrodes and/or not at full strength	• Output lead connections not connected.	• Are output connections on and tight?	• Remove and reconnect all output connections at module and electrodes.
	• Arcing to grill away from burner(s).	• If possible, observe grill in dark location. Operate ignition system and look for arcing between output wires and grill frame.	• If sparks are observed other than from burner(s), wire insulation may be damaged. Replace wires.
	• Weak battery.	• All sparks present but weak or at slow rate.	• Replace battery with a new AAA-size alkaline battery.
	• Electrodes are wet.	• Has moisture accumulated on electrode and/or in burner ports?	• Use paper towel to remove moisture.
	• Electrodes cracked or broken "sparks at crack".	• Inspect electrodes for cracks.	• Replace cracked or broken electrodes.

Troubleshooting

Emergencies	Possible Cause	Prevention/Solution
Gas leaking from cracked/cut/burned hose.	• Old hose, cut in hose.	• Turn off gas at source. If hose is cut or cracked, replace hose.
Fire coming through control panel.	• Fire in burner tube section of burner due to partial blockage.	• Turn off at gas source (if possible without injury to self). If fire cannot be controlled with baking soda/extinguisher, call local fire department. Remove burner and inspect for spider nest or rust. Clean using bottle brush.
	• Misalignment of valve to burner tube.	• Ensure valves and burner tubes are aligned per assembly instructions.
Grease fire or continuous excessive flames above cooking surface.	• Too much grease buildup in burner area.	• Turn off gas source. Leave lid open to allow flames to die down. After cooling, clean food particles and excess grease from inside firebox area, grease cup/pan/tray, and other surfaces.

Problem	Possible Cause	Prevention/Solution
Burner(s) will not light using ignitor. (See Electronic Ignition Troubleshooting also) *Continued on next page.*	**GAS ISSUES:**	
	• Trying to light wrong burner.	• See instructions on control panel and on page
	• Burner not engaged with control valve.	• Make sure valves are positioned inside of burner tubes with clips attached (if featured).
	• Obstruction in burner.	• Ensure burner tubes are not obstructed with spider webs or other matter. See cleaning section of Use and Care manual.
	• No gas flow.	• Turn gas on at source.
	.	
	ELECTRICAL ISSUES:	
	• Electrode cracked or broken; “sparks at crack.”	• Replace electrode(s).
	• Electrode tip not in proper position.	Main Burners: • Tip of electrode should be pointing toward port hole in burner. The distance should be 1/8” to 3/16”. Adjust if necessary. Sideburner: • Tip of electrode should be pointing toward gas port opening on burner. The distance should be 1/8” to 3/16”. Adjust if necessary.
	• Wire and/or electrode covered with cooking residue.	• Clean wire and/or electrode with rubbing alcohol and clean swab.
	• Wires are loose or disconnected.	• Reconnect wires or replace electrode/wire assembly.
	• Wires are shorting (sparking) between ignitor and electrode.	• Replace ignitor wire.
	• Dead battery.	• Replace with a new AAA-size alkaline battery.

Troubleshooting (*continued*)

Problem	Possible Cause	Prevention/Solution
Burner(s) will not light using ignitor. (See Electronic Ignition Troubleshooting also)	**ELECTRONIC IGNITION:** • No spark, no ignition noise. • No spark, some ignition noise. • Sparks, but not at electrode or at full strength.	• See Section I of Electronic Ignition System. • See Section II of Electronic Ignition System. • See Section III of Electronic Ignition System.
Burner(s) will not match light.	• Match will not reach. • Improper method of match-lighting.	• Use paper match, long-stem match (fireplace match) or match holder (where supplied). • See “Match-Lighting” section.
Flames blow out.	• High or gusting winds.	• Turn front of grill to face wind or increase flame height.
Flare-up.	• Grease buildup. • Excessive fat in meat. • Excessive cooking temperature.	• Clean burners and inside of grill/firebox. • Trim fat from meat before grilling. • Adjust (lower) temperature accordingly.
Persistent grease fire.	• Grease trapped by food buildup around burner system.	• Turn knobs to OFF. Turn gas off at gas source. Leave lid in position and let fire burn out. After grill cools, remove and clean all parts.
Flashback... (fire in burner tube(s)).	• Burner and/or burner tubes are blocked.	• Turn knobs to OFF. Clean burner and/or burner tubes. See burner cleaning section.
One burner does not light from other burner(s).	• Grease buildup or food particles in end(s) of carryover tube(s).	• Clean carry-over tube(s) with wire brush.

Page blank intentionally

Page blank intentionally

Please register your grill online at:

WWW.GRILLREGISTRATION.COM

(If you register online, you do not need to send in this registration card.)

PLEASE FILL OUT THIS CARD AND RETURN IT *WITHIN* 10 DAYS OF PURCHASE. *FAILURE TO RETURN MAY AFFECT YOUR WARRANTY COVERAGE.*
LLENE ESTA TARJETA Y DEVUÉLVALA DENTRO DE LOS 10 DÍAS DE LA COMPRA. *SI NO LA DEVUELVE, PUEDE VERSE AFECTADA SU COBERTURA DE GARANTÍA.*
VEUILLEZ COMPLÉTER CETTE CARTE ET LA RETOURNER DANS LES 10 JOURS SUIVANT L'ACHAT.
LA COUVERTURE DE VOTRE GARANTIE POURRAIT EN ÊTRE AFFECTÉE SI VOUS NE LE FAITES PAS.

1 **First Name/Nombre/Prénom** **Initial/Inicial/Initiale** **Last Name/Apellido/Nom de famille**

Address (number and street)/**Dirección** (número y calle)/**Adresse** (numéro et rue) **Apt Number/Nº de apart./Nº d'appt.**

City/Ciudad/Ville **State/Estado/Province** **Zip Code/Código zip/Code postal**

2 **E-mail Address/Dirección de correo electrónico/Adresse électronique**

If you voluntarily provide us with your email address, you give us permission to use your email address to send you offers that may interest you.
Si nos informa voluntariamente su dirección de correo electrónico, nos da permiso para usarlo a fin de enviarle ofertas que pueden interesarle.
Si vous choisissez de nous fournir votre adresse électronique, vous nous donnez la permission de l'utiliser pour vous faire part d'offres spéciales susceptibles de vous intéresser.

(Example: your name@your host.com) (Ejemplo: su nombre@su host.com) (Exemple : votre nom@votre hôte.com)

3 **Phone Number/Número telefónico/Numéro de téléphone**

4 **IMPORTANT!/¡IMPORTANTE!/IMPORTANT!**
Write Serial Number and Model Number in spaces below.
Escriba en los espacios de abajo el número de serie y el número de modelo.
Inscrivez le numéro de série et le numéro de modèle dans les espaces ci-dessous.

6 **Date of Purchase/Fecha de compra/Date de l'achat**

7 **Store Name/Nombre de la tienda/Nom du magasin**

8 **Purchase Price/Precio de compra/Prix d'achat**
$ _____ .00

5 **Your Gender/Su sexo/Sexe:** 1.☐ Male/Masculino/Masculin 2.☐ Female/Femenino/Féminin

9 **Which product are your registering?**
¿Qué producto está registrando?
Quel produit enregistrez-vous?

1.☐ Gas Grill/Parrilla de gas/ Gril au gaz
2.☐ Electric Grill/Parrilla eléctrica/ Gril électrique
3.☐ Smoker/Ahumadora/Fumoir
4.☐ Charcoal Grill/Parrilla de carbón/ Barbecue au charbon
5.☐ Charcoal Smoker/Ahumadora de carbón/Fumoir au charbon
6.☐ Outdoor Fireplace/Hogar para exteriores/Foyer extérieur
7.☐ Cooker/Fryer / Cocina/freidora / Cuiseur/Friteuse
8.☐ Other/Otro/Autre

Mail to:
Product Registration Dept.
PO BOX 1240
Columbus, Georgia 31902-1240

10 **Which of these <u>sources</u> influenced your decision to buy this product? (check all that apply)**
¿Cuál de estas <u>fuentes</u> influenció a su decisión de comprar este producto? (Marque todas las que correspondan)
Parmi les <u>éléments ci-dessous</u>, qu'est-ce qui a influencé votre décision d'acheter ce produit? (Cochez tous les éléments s'appliquant)

1.☐ Magazine/newspaper advertisement / Propaganda en revista/periódico / Publicité dans un magazine ou dans un journal
2.☐ Television commercial/Comercial televisivo/Publicité à la télévision
3.☐ Grill was assembled/Parrilla ensamblada/Le gril était déjà assemblé
4.☐ In-store display/Exhibidor en la tienda/Promotion sur le lieu de vente
5.☐ Store circular/Circular de la tienda/Prospectus de magasin
6.☐ Brand name/Marca/Marque
7.☐ Product style/Estilo del producto/Style du produit
8.☐ Price/value / Precio/valor / Rapport prix/valeur
9.☐ Product quality/Calidad del producto/Qualité du produit
10.☐ Friend/Relative recommendation / Recomendación de amigo o pariente / Recommandation d'un(e) ami(e)/parent(e)
11.☐ Salesperson recommendation/Recomendación del vendedor/ Recommandation d'un(e) préposé(e) à la vente
12.☐ Grill size/Tamaño de la parrilla/Taille du gril
13.☐ Product warranty/Garantía del producto/Garantie du produit
14.☐ Store demonstration/Demostración en la tienda/Démonstration en magasin
15.☐ Point of purchase/Punto de compra/Lieu de vente
16.☐ Other/Otras/Autre: _____

Thank you for completing this questionnaire. Your answers will help us and other companies reach you with offers that may interest you. If you prefer not to receive these offers, please check here ☐.

Gracias por completar este cuestionario. Sus respuestas nos ayudarán, a nosotros y a otras compañías, a llegar a ustedes con ofertas que puedan resultarles de interés. Si prefiere no recibir estas ofertas, por favor marque aquí ☐.

Merci d'avoir bien voulu remplir ce questionnaire. Vos réponses nous aideront et aideront d'autres compagnies à vous communiquer des offres spéciales susceptibles de vous intéresser. Si vous préférez ne pas recevoir d'informations concernant ces offres spéciales, veuillez cocher ici ☐.

Page blank intentionally

ARRÊTEZ

En cas de problème

CONTACTEZ NOUS D'ABORD.

e ramenez pas ce produit au magasin.

NOUS POUVONS VOUS AIDER.

1-800-387-6057

24 heures sur 24 - 7 jours sur 7

SERVICE APRÈS-VENTE DU GRILL

Recette pour grillade en toute sécurité

- ❑ Lisez tous les manuels d'utilisation
- ❑ Remplissez la carte de garantieEnsure
- ❑ Assurez-vous que les valves sont correctement installées sur les tuyaux des brûleurs
- ❑ Assurez-vous que les boutons de commande sont en position OFF
- ❑ Remplissez le réservoir PL, le cas échéant
- ❑ Effectuez un essai d'étanchéité

Merci de votre achat

STOP

Should you encounter any problem

CALL US FIRST.

Do not return this product to the store.

WE CAN HELP.

1-800-241-7548

24 Hours a Day - 7 Days a Week

GRILL SERVICE CENTER

Recipe for Grilling Safely

- ❑ Read all Owner's Manuals
- ❑ Complete Warranty Card
- ❑ Ensure valves are correctly installed in burner tubes
- ❑ Ensure control knobs lock on OFF position
- ❑ Fill LP Tank, if provided
- ❑ Perform Leak Test

Thank You for Your Purchase!